IR Detector for Mid Range Proximity Sensor

22531

DESCRIPTION

The TSSP57P38 is a compact infrared detector module for proximity sensing application. It receives 38 kHz modulated signals and has a peak sensitivity of 940 nm.

The length of the detector's output pulse varies in proportion to the amount of light reflected from the object being detected.

FEATURES

- Height of 0.8 mm
- Up to 2 m for proximity sensing
- Receives 38 kHz modulated signal
- Photo detector and preamplifier in one package
- Low supply current
- Shielding against EMI
- Visible light is suppressed by IR filter
- Insensitive to supply voltage ripple and noise
- Supply voltage: 2.0 V to 5.5 V
- Material categorization: for definitions of compliance please see www.vishay.com/doc?99912

Pb-free

e4

RoHS COMPLIANT

HALOGEN FREE

GREEN (5-2008)

LINKS TO ADDITIONAL RESOURCES

Product Page

Marking

APPLICATIONS

- Object approach detection for activation of displays and user consoles, signaling of alarms, etc.
- Simple gesture controls
- Differentiation of car arrival, static, car departure in parking lots
- Reflective sensors for toilet flush
- Navigational sensor for robotics

DESIGN SUPPORT TOOLS

- 3D models
- Window size calculator

BLOCK DIAGRAM

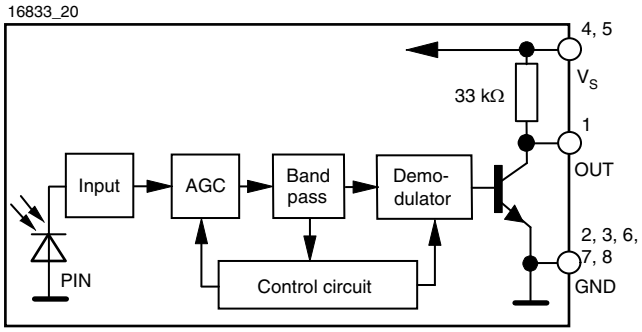

THIS DOCUMENT IS SUBJECT TO CHANGE WITHOUT NOTICE. THE PRODUCTS DESCRIBED HEREIN AND THIS DOCUMENT ARE SUBJECT TO SPECIFIC DISCLAIMERS, SET FORTH AT www.vishay.com/doc?91000

MECHANICAL DATA

Pinning:

1 = OUT, 2, 3, 6, 7, 8 = GND, 4, 5 = V_S

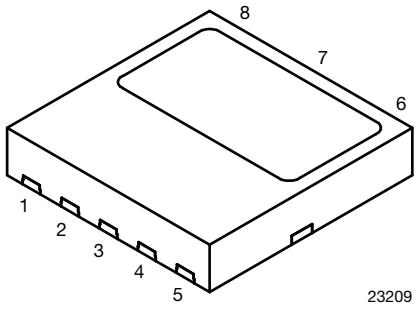

ORDERING CODE

Taping:

TSSP57P38TT1 - top view taped, 1800 pcs/reel

PROXIMITY SENSING

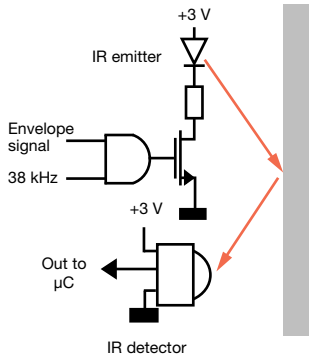

PARTS TABLE		
Carrier frequency	38 kHz	TSSP57P38
Package		Belobog
Pinning		1 = OUT, 2, 3, 6, 7, 8 = GND, 4, 5 = V_S
Dimensions (mm)		3.95 W x 3.95 H x 0.8 D
Mounting		SMD
Application		Proximity sensors
Special options		• Extended temperature range: www.vishay.com/doc?82738

ABSOLUTE MAXIMUM RATINGS				
PARAMETER	**TEST CONDITION**	**SYMBOL**	**VALUE**	**UNIT**
Supply voltage		V_S	-0.3 to +6	V
Supply current		I_S	5	mA
Output voltage		V_O	-0.3 to (V_S + 0.3)	V
Output current		I_O	5	mA
Junction temperature		T_j	100	°C
Storage temperature range		T_{stg}	-25 to +85	°C
Operating temperature range		T_{amb}	-25 to +85	°C
Power consumption	$T_{amb} \leq 85$ °C	P_{tot}	10	mW

Note

- Stresses beyond those listed under “Absolute Maximum Ratings” may cause permanent damage to the device. This is a stress rating only and functional operation of the device at these or any other conditions beyond those indicated in the operational sections of this specification is not implied. Exposure to absolute maximum rating conditions for extended periods may affect the device reliability

THIS DOCUMENT IS SUBJECT TO CHANGE WITHOUT NOTICE. THE PRODUCTS DESCRIBED HEREIN AND THIS DOCUMENT ARE SUBJECT TO SPECIFIC DISCLAIMERS, SET FORTH AT www.vishay.com/doc?91000

ELECTRICAL AND OPTICAL CHARACTERISTICS (T_{amb} = 25 °C, unless otherwise specified)						
PARAMETER	**TEST CONDITION**	**SYMBOL**	**MIN.**	**TYP.**	**MAX.**	**UNIT**
Supply voltage		V_S	2.0	-	5.5	V
Supply current	V_S = 3.3 V, E_e = 0	I_{SD}	0.25	0.35	0.45	mA
	E_v = 40 klx, sunlight	I_{SH}	-	0.45	-	mA
Receiving distance	Direct line of sight, IR diode TSAL6200, I_F = 50 mA, test signal see Fig. 1	d	-	14	-	m
Output voltage low	I_{OSL} = 0.5 mA, E_e = 0.7 mW/m^2, test signal see Fig. 1	V_{OSL}	-	-	100	mV
Minimum irradiance	Pulse width tolerance: $t_{pi} - 5/f_o < t_{po} < t_{pi} + 5/f_o$, test signal see Fig. 1	$E_{e\ min.}$	-	0.3	0.6	mW/m^2
Maximum irradiance	Pulse width tolerance: $t_{pi} - 5/f_o < t_{po} < t_{pi} + 5/f_o$, test signal see Fig. 1	$E_{e\ max.}$	30	-	-	W/m^2
Directivity	Angle of half receiving distance	$\varphi_{1/2}$	-	± 75	-	°

TYPICAL CHARACTERISTICS (T_{amb} = 25 °C, unless otherwise specified)

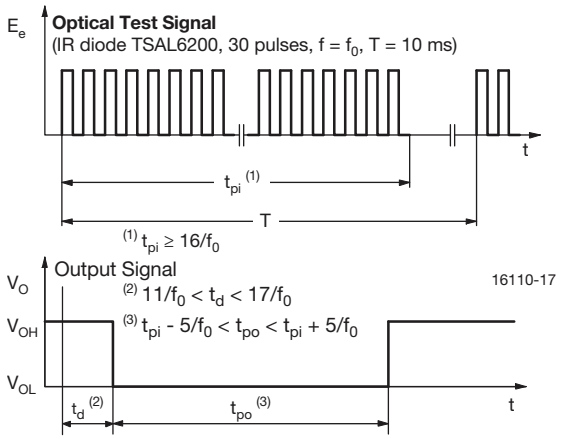

Fig. 1 - Output Active Low

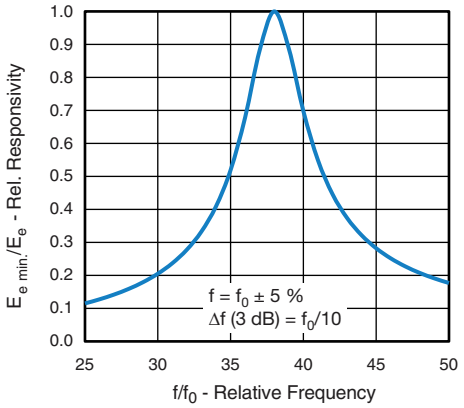

Fig. 3 - Frequency Dependance of Responsivity

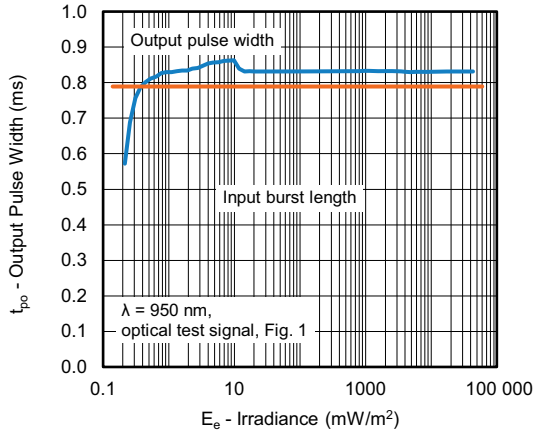

Fig. 2 - Pulse Length and Sensitivity in Dark Ambient

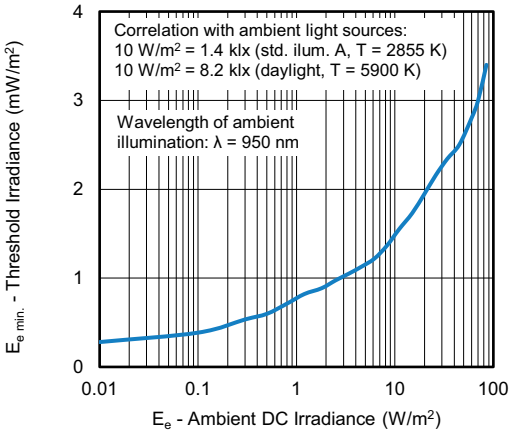

Fig. 4 - Sensitivity in Bright Ambient

THIS DOCUMENT IS SUBJECT TO CHANGE WITHOUT NOTICE. THE PRODUCTS DESCRIBED HEREIN AND THIS DOCUMENT ARE SUBJECT TO SPECIFIC DISCLAIMERS, SET FORTH AT www.vishay.com/doc?91000

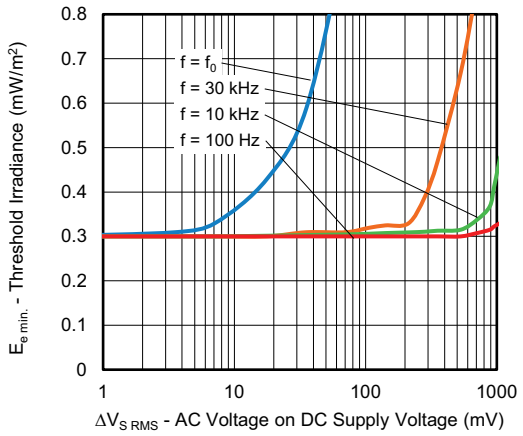

Fig. 5 - Sensitivity vs. Supply Voltage Disturbances

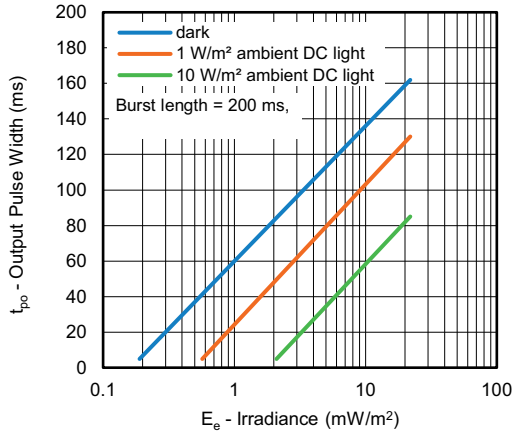

Fig. 6 - Output Pulse Width vs. Irradiance

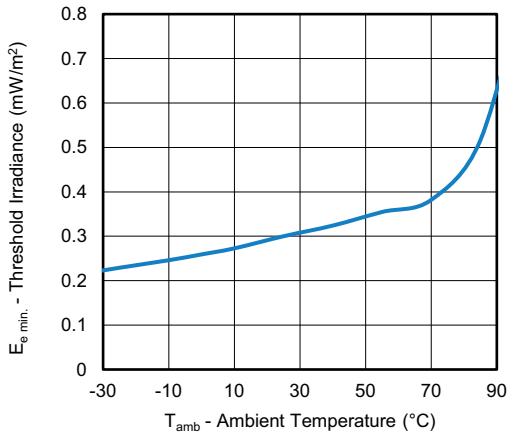

Fig. 7 - Sensitivity vs. Ambient Temperature

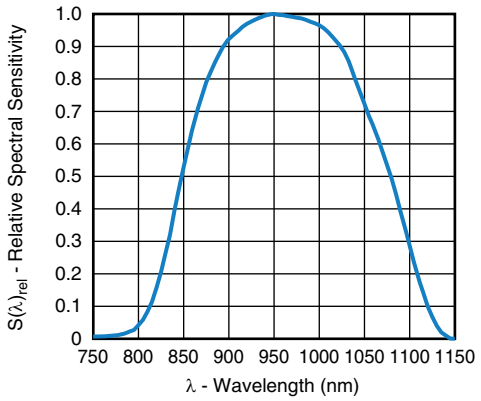

Fig. 8 - Relative Spectral Sensitivity vs. Wavelength

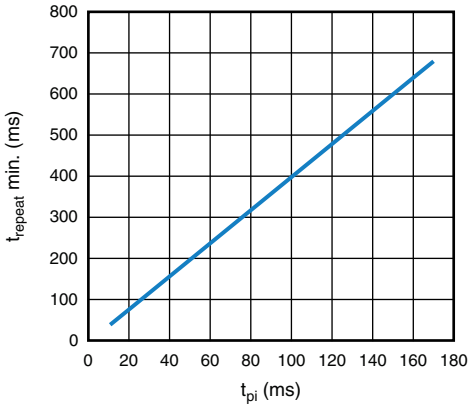

Fig. 9 - Max. Rate of Bursts

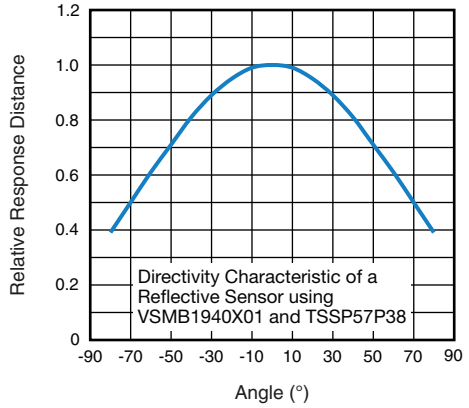

Fig. 10 - Angle Characteristic

THIS DOCUMENT IS SUBJECT TO CHANGE WITHOUT NOTICE. THE PRODUCTS DESCRIBED HEREIN AND THIS DOCUMENT ARE SUBJECT TO SPECIFIC DISCLAIMERS, SET FORTH AT www.vishay.com/doc?91000

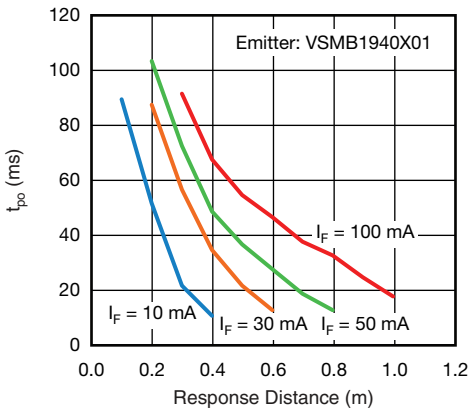

Fig. 11 - t_{po} vs. Distance

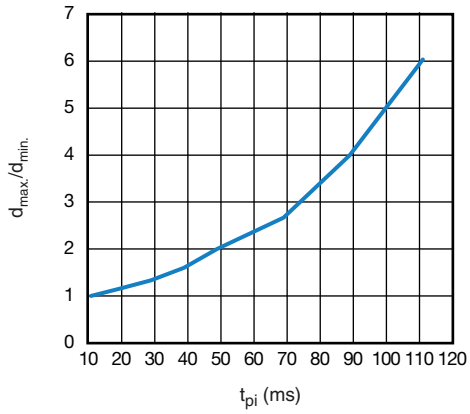

Fig. 12 - Dynamic Range of Sensor vs. t_{pi}

The typical application of the TSSP57P38 is a reflective sensor with analog information contained in its output. Such a sensor is evaluating the time required by the AGC to suppress a quasi continuous signal. The time required to suppress such a signal is longer when the signal is strong than when the signal is weak, resulting in a pulse length corresponding to the distance of an object from the sensor. This kind of analog information can be evaluated by a microcontroller. The absolute amount of reflected light depends much on the environment and is not evaluated. Only sudden changes of the amount of reflected light, and therefore changes in the pulse width, are evaluated using this application.

Example of a signal pattern:

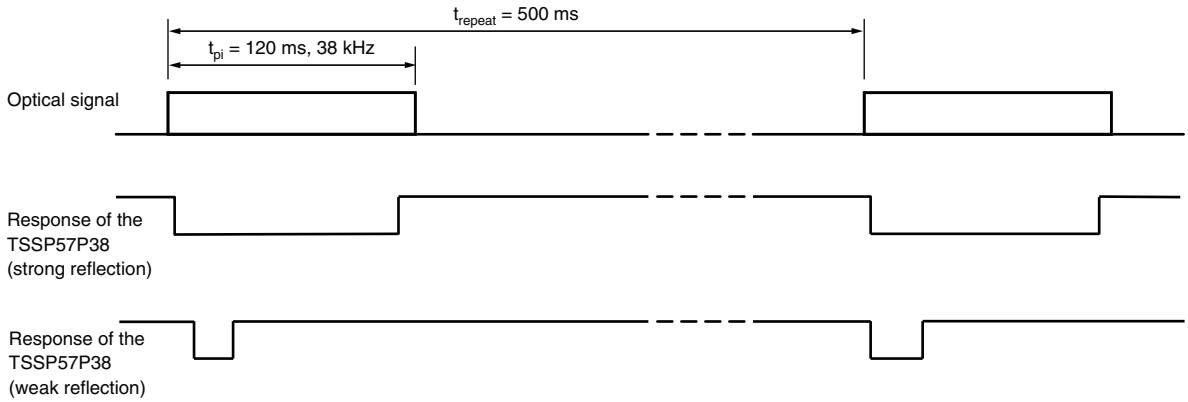

Example for a sensor hardware:

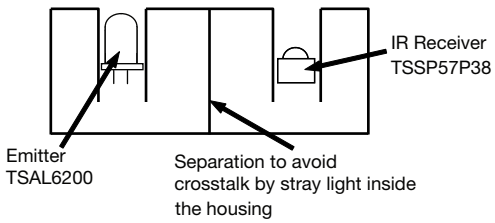

There should be no common window in front of the emitter and receiver in order to avoid crosstalk by guided light through the window.

The logarithmic characteristic of the AGC in the TSSP57P38 results in an almost linear relationship between distance and pulse width. Ambient light has also some impact to the pulse width of this kind of sensor, making the pulse shorter.

THIS DOCUMENT IS SUBJECT TO CHANGE WITHOUT NOTICE. THE PRODUCTS DESCRIBED HEREIN AND THIS DOCUMENT ARE SUBJECT TO SPECIFIC DISCLAIMERS, SET FORTH AT www.vishay.com/doc?91000

PACKAGE DIMENSIONS in millimeters

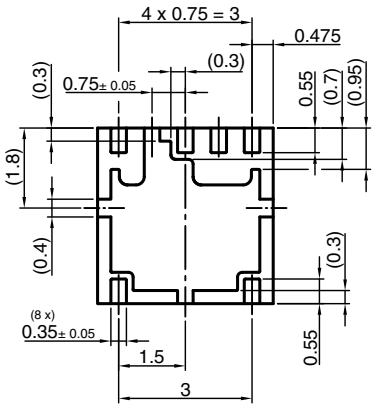

Not indicated tolerances ± 0.1

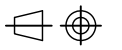

technical drawings according to DIN specifications

Pinning from topview

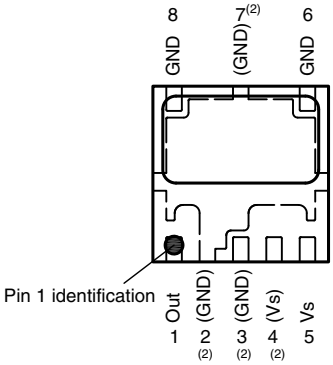

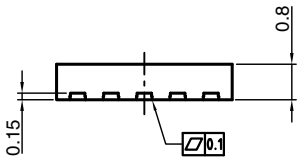

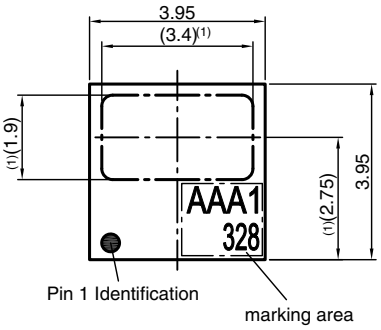

Proposed pad layout from component side (dim. for reference only)

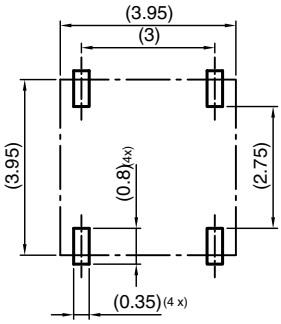

Drawing-No.: 6.550-5315.01-4
Issue: 2; 12.02.14

Notes

(1) Optically effective area

(2) Pins connected internally. It is not necessary to connect externally

THIS DOCUMENT IS SUBJECT TO CHANGE WITHOUT NOTICE. THE PRODUCTS DESCRIBED HEREIN AND THIS DOCUMENT ARE SUBJECT TO SPECIFIC DISCLAIMERS, SET FORTH AT www.vishay.com/doc?91000

ASSEMBLY INSTRUCTIONS

Reflow Soldering

- Reflow soldering must be done within 168 h while stored under a max. temperature of 30 °C, 60 % RH after opening the dry pack envelope
- Set the furnace temperatures for pre-heating and heating in accordance with the reflow temperature profile as shown in the diagram. Exercise extreme care to keep the maximum temperature below 260 °C. The temperature shown in the profile means the temperature at the device surface. Since there is a temperature difference between the component and the circuit board, it should be verified that the temperature of the device is accurately being measured
- Handling after reflow should be done only after the work surface has been cooled off

Manual Soldering

- Use a soldering iron of 25 W or less. Adjust the temperature of the soldering iron below 300 °C
- Finish soldering within 3 s
- Handle products only after the temperature has cooled off

VISHAY LEAD (Pb)-FREE REFLOW SOLDER PROFILE

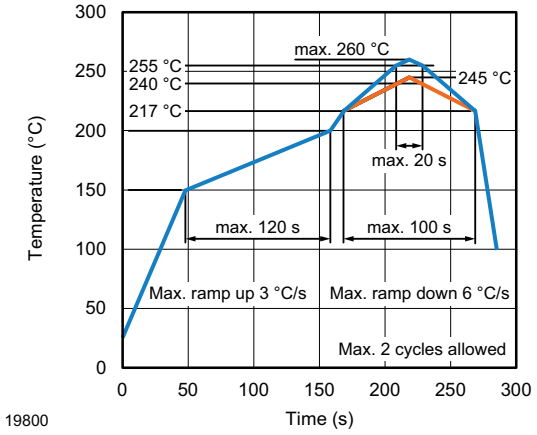

THIS DOCUMENT IS SUBJECT TO CHANGE WITHOUT NOTICE. THE PRODUCTS DESCRIBED HEREIN AND THIS DOCUMENT ARE SUBJECT TO SPECIFIC DISCLAIMERS, SET FORTH AT www.vishay.com/doc?91000

TAPING VERSION TSSP57P38 DIMENSIONS in millimeters

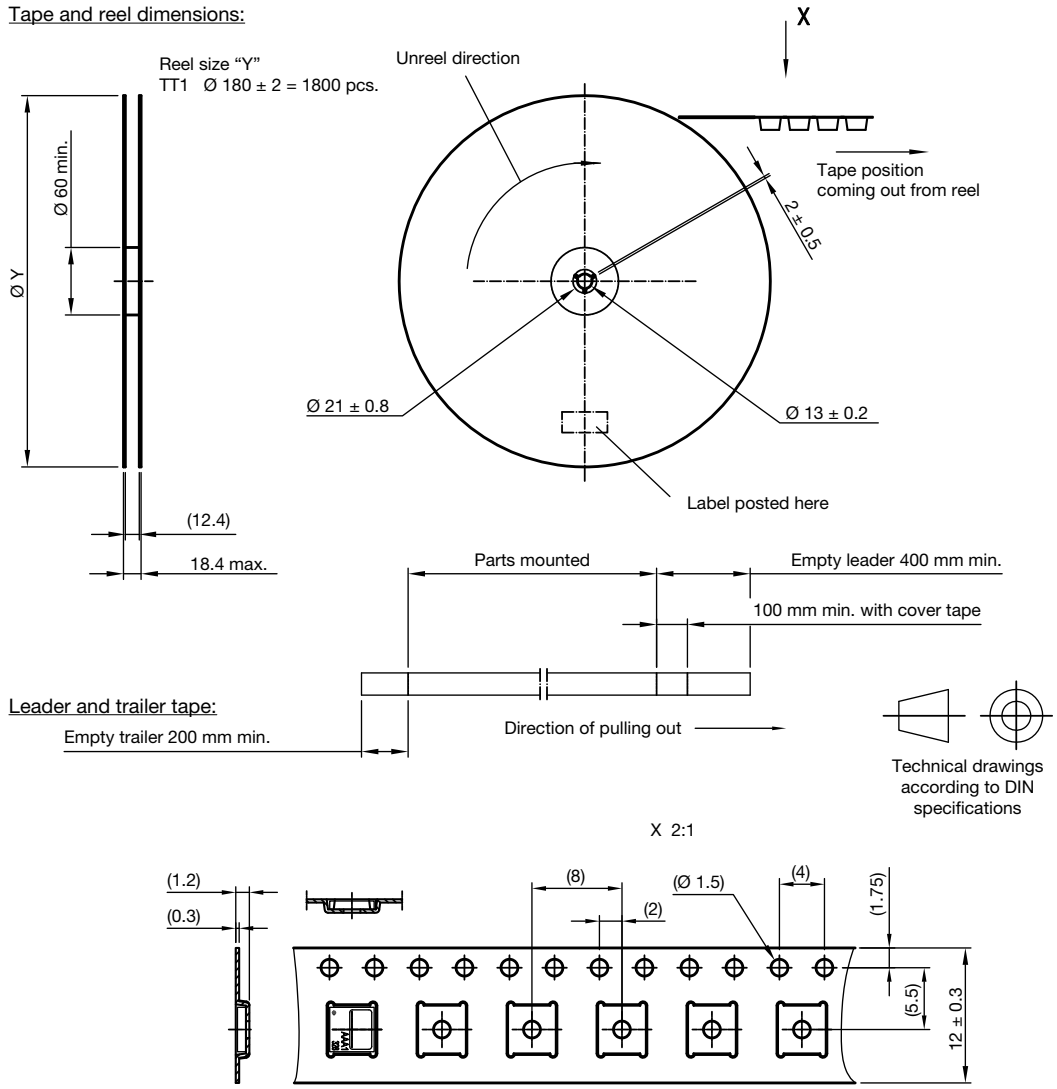

Drawing-No.: 9.700-5347.01-4
Issue: 2; 07.03.18

Not indicated tolerances ± 0.1

THIS DOCUMENT IS SUBJECT TO CHANGE WITHOUT NOTICE. THE PRODUCTS DESCRIBED HEREIN AND THIS DOCUMENT ARE SUBJECT TO SPECIFIC DISCLAIMERS, SET FORTH AT www.vishay.com/doc?91000

OUTER PACKAGING

The sealed reel is packed into a pizza box.

CARTON BOX DIMENSIONS in millimeters

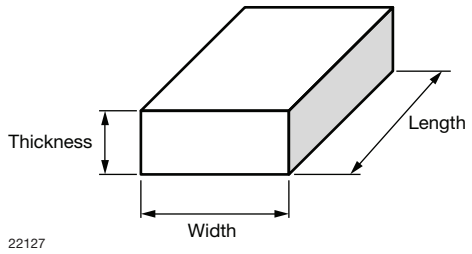

	THICKNESS	WIDTH	LENGTH
Pizza box (Panhead, Heimdall, and Belobog) (taping in reels)	50	340	340

LABEL

Standard bar code labels for finished goods

The standard bar code labels are product labels and used for identification of goods. The finished goods are packed in final packing area. The standard packing units are labeled with standard bar code labels before transported as finished goods to warehouses. The labels are on each packing unit and contain Vishay Semiconductor GmbH specific data.

VISHAY SEMICONDUCTOR GmbH STANDARD BAR CODE PRODUCT LABEL (finished goods)

PLAIN WRITING	ABBREVIATION	LENGTH
Item-description	-	18
Item-number	INO	8
Selection-code	SEL	3
LOT-/serial-number	BATCH	10
Data-code	COD	3 (YWW)
Plant-code	PTC	2
Quantity	QTY	8
Accepted by	ACC	-
Packed by	PCK	-
Mixed code indicator	MIXED CODE	-
Origin	xxxxxxx+	Company logo
LONG BAR CODE TOP	**TYPE**	**LENGTH**
Item-number	N	8
Plant-code	N	2
Sequence-number	X	3
Quantity	N	8
Total length	-	21
SHORT BAR CODE BOTTOM	**TYPE**	**LENGTH**
Selection-code	X	3
Data-code	N	3
Batch-number	X	10
Filter	-	1
Total length	-	17

THIS DOCUMENT IS SUBJECT TO CHANGE WITHOUT NOTICE. THE PRODUCTS DESCRIBED HEREIN AND THIS DOCUMENT ARE SUBJECT TO SPECIFIC DISCLAIMERS, SET FORTH AT www.vishay.com/doc?91000

DRY PACKING

The reel is packed in an anti-humidity bag to protect the devices from absorbing moisture during transportation and storage.

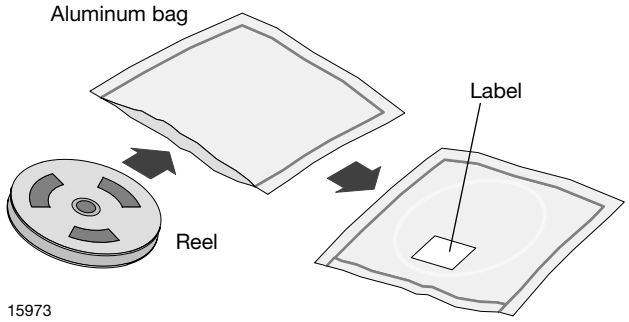

15973

FINAL PACKING

The sealed reel is packed into a cardboard box.

RECOMMENDED METHOD OF STORAGE

Dry box storage is recommended as soon as the aluminum bag has been opened to prevent moisture absorption. The following conditions should be observed, if dry boxes are not available:

- Storage temperature 10 °C to 30 °C
- Storage humidity ≤ 60 % RH max.

After more than 168 h under these conditions moisture content will be too high for reflow soldering.

In case of moisture absorption, the devices will recover to the former condition by drying under the following condition:

192 h at 40 °C + 5 °C / - 0 °C and < 5 % RH (dry air / nitrogen) or

96 h at 60 °C + 5 °C and < 5 % RH for all device containers or

24 h at 125 °C + 5 °C not suitable for reel or tubes.

An EIA JEDEC® standard J-STD-020 level 3 label is included on all dry bags.

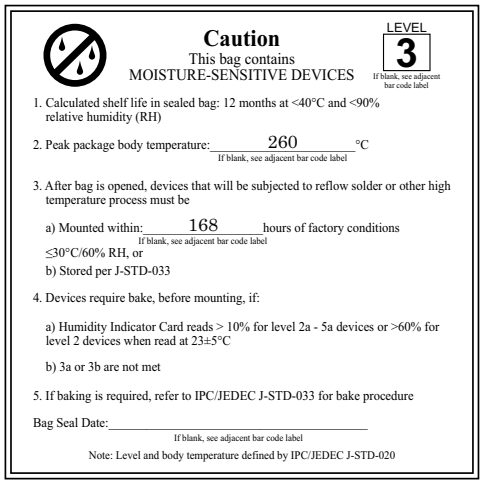

Caution
This bag contains
MOISTURE-SENSITIVE DEVICES

LEVEL 3
If blank, see adjacent bar code label

1. Calculated shelf life in sealed bag: 12 months at <40°C and <90% relative humidity (RH)
2. Peak package body temperature: 260 °C
   If blank, see adjacent bar code label
3. After bag is opened, devices that will be subjected to reflow solder or other high temperature process must be
   a) Mounted within: 168 hours of factory conditions
   If blank, see adjacent bar code label
   ≤30°C/60% RH, or
   b) Stored per J-STD-033
4. Devices require bake, before mounting, if:
   a) Humidity Indicator Card reads > 10% for level 2a - 5a devices or >60% for level 2 devices when read at 23±5°C
   b) 3a or 3b are not met
5. If baking is required, refer to IPC/JEDEC J-STD-033 for bake procedure

Bag Seal Date: _____
If blank, see adjacent bar code label

Note: Level and body temperature defined by IPC/JEDEC J-STD-020

22650

EIA JEDEC standard J-STD-020 level 3 label is included on all dry bags

ESD PRECAUTION

Proper storage and handling procedures should be followed to prevent ESD damage to the devices especially when they are removed from the antistatic shielding bag. Electrostatic sensitive devices warning labels are on the packaging.

VISHAY SEMICONDUCTORS STANDARD BAR CODE LABELS

The Vishay Semiconductors standard bar code labels are printed at final packing areas. The labels are on each packing unit and contain Vishay Semiconductors specific data.

BAR CODE PRODUCT LABEL (Example)

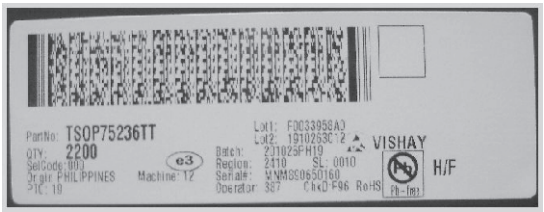

22178

THIS DOCUMENT IS SUBJECT TO CHANGE WITHOUT NOTICE. THE PRODUCTS DESCRIBED HEREIN AND THIS DOCUMENT ARE SUBJECT TO SPECIFIC DISCLAIMERS, SET FORTH AT www.vishay.com/doc?91000

Disclaimer

ALL PRODUCT, PRODUCT SPECIFICATIONS AND DATA ARE SUBJECT TO CHANGE WITHOUT NOTICE TO IMPROVE RELIABILITY, FUNCTION OR DESIGN OR OTHERWISE.

Vishay Intertechnology, Inc., its affiliates, agents, and employees, and all persons acting on its or their behalf (collectively, “Vishay”), disclaim any and all liability for any errors, inaccuracies or incompleteness contained in any datasheet or in any other disclosure relating to any product.

Vishay makes no warranty, representation or guarantee regarding the suitability of the products for any particular purpose or the continuing production of any product. To the maximum extent permitted by applicable law, Vishay disclaims (i) any and all liability arising out of the application or use of any product, (ii) any and all liability, including without limitation special, consequential or incidental damages, and (iii) any and all implied warranties, including warranties of fitness for particular purpose, non-infringement and merchantability.

Statements regarding the suitability of products for certain types of applications are based on Vishay's knowledge of typical requirements that are often placed on Vishay products in generic applications. Such statements are not binding statements about the suitability of products for a particular application. It is the customer's responsibility to validate that a particular product with the properties described in the product specification is suitable for use in a particular application. Parameters provided in datasheets and / or specifications may vary in different applications and performance may vary over time. All operating parameters, including typical parameters, must be validated for each customer application by the customer's technical experts. Product specifications do not expand or otherwise modify Vishay's terms and conditions of purchase, including but not limited to the warranty expressed therein.

Hyperlinks included in this datasheet may direct users to third-party websites. These links are provided as a convenience and for informational purposes only. Inclusion of these hyperlinks does not constitute an endorsement or an approval by Vishay of any of the products, services or opinions of the corporation, organization or individual associated with the third-party website. Vishay disclaims any and all liability and bears no responsibility for the accuracy, legality or content of the third-party website or for that of subsequent links.

Except as expressly indicated in writing, Vishay products are not designed for use in medical, life-saving, or life-sustaining applications or for any other application in which the failure of the Vishay product could result in personal injury or death. Customers using or selling Vishay products not expressly indicated for use in such applications do so at their own risk. Please contact authorized Vishay personnel to obtain written terms and conditions regarding products designed for such applications.

No license, express or implied, by estoppel or otherwise, to any intellectual property rights is granted by this document or by any conduct of Vishay. Product names and markings noted herein may be trademarks of their respective owners.

© 2024 VISHAY INTERTECHNOLOGY, INC. ALL RIGHTS RESERVED