Additional Resources: Product Page

REV.	DESCRIPTION	DATE
A	NEW DRAWING	6/10/2013
B	cable length changed, part# changed	7/29/2013
C	added ground wire to unterminated end	3/4/2014
D	brand update	4/15/2020

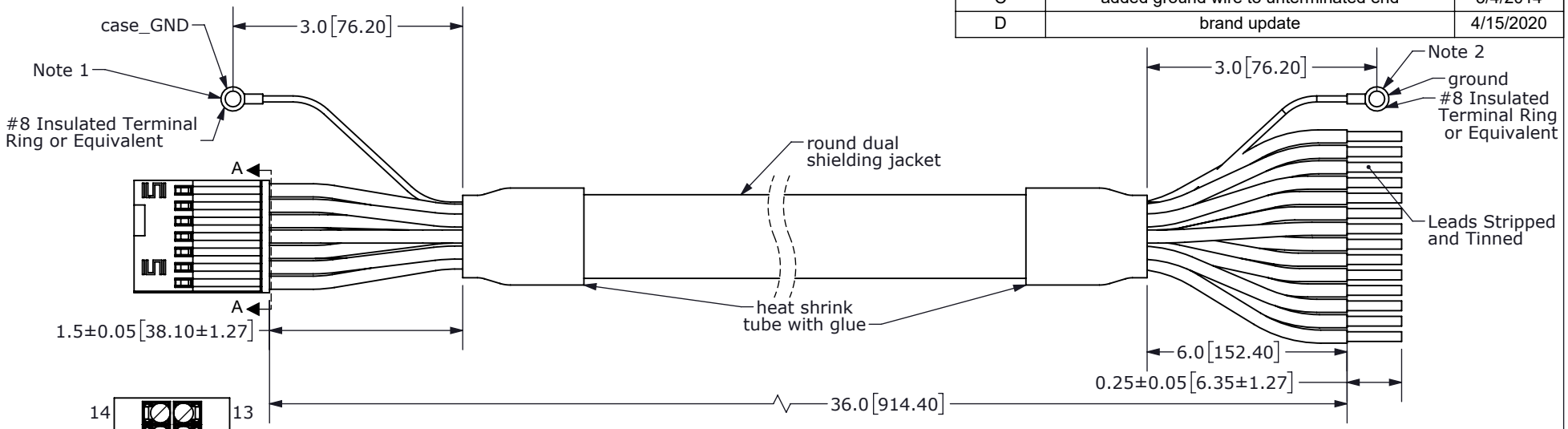

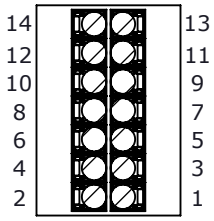

SECTION A-A
SCALE 3 : 1
(Back of Connector Housing)

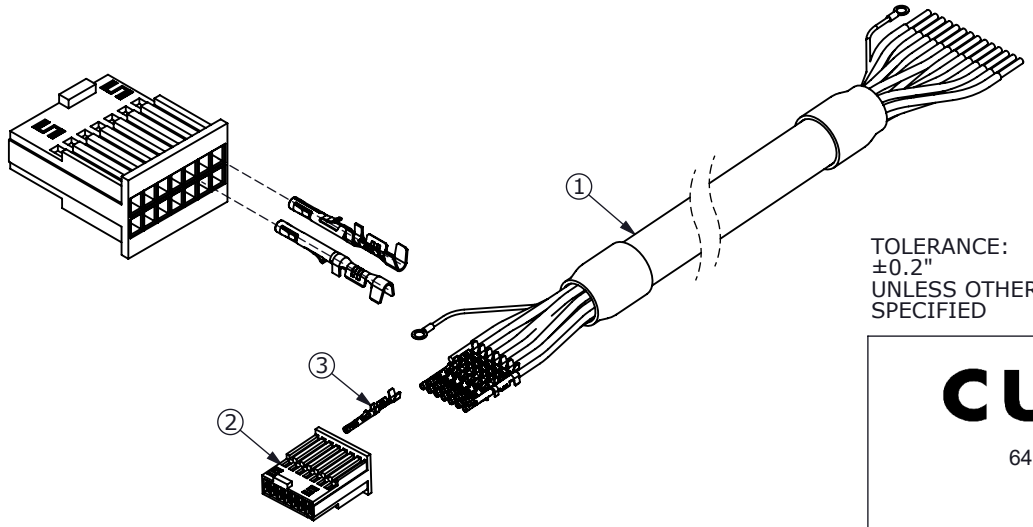

Connector Pinout			
#	Function	Color	
		Primary	Stripe
1	RX_ENC+	Blue	Red
2	TX_ENC+	Green	Red
3	U+	Brown	Black
4	GND	Black	Red
5	W+	Orange	Black
6	+5V	Red	Black
7	V+	Red	White
8	B+	Green	Black
9	B-	Black	Green
10	A+	White	Black
11	A-	Black	White
12	Z+	Blue	Black
13	Z-	Black	Blue
14	MCLRB	Yellow	Black

TOLERANCE:
±0.2"
UNLESS OTHERWISE SPECIFIED

RoHS

NOTES 1: case_GND is connected internally to GND (black/red)
2: ground connected internally to cable shielding

	Part	QTY	Part#
1	Cable	1	3M 3600B/20
2	Connector	1	Samtec ISDF-07-D-L
3	Crimp Pins	14	Samtec CC03L-2830-01-G

CUI DEVICES

6405 SW Rosewood St, Suite C
Lake Oswego, OR 97035
Phone: 877-323-3576

Website: www.cuidevices.com

ITEM NO: 977-7011R		REV: D	
PART NO. AMT-14C-1-036		UNITS: INCH[MM]	
DRAWN BY: RDS	APPROVED BY:	SCALE: 2:1	

PC FILE NAME: AMT-14C-1-036

COPYRIGHT 2020 BY CUI DEVICES