In Addition to GlobTek Inc.'s renewed ISO9001:2015 - Quality Management System Certification, GlobTek Inc. is now certified to:

ISO13485:2016 - Medical Devices Quality Management System Certification
ISO14001:2015 - Environmental Management System Certification

ISO Certificates are available online at https://www.globtek.com/iso-certificates/

The acceptance of this specification and use of the product described in this document indicates the acceptance and binding of the customer to Globtek TERMS AND CONDITIONS (attached to the end of this document), which supersede all other agreements, terms, and conditions (https://www.globtek.com/terms-and-conditions/).

The purchaser of this product (Customer) agrees that it is their sole responsibility to determine suitability/fitness of the product described in this specification for their application and to take precautions for protection against any hazards attendant to the handling and use of the product.

Footnote:

GlobTek Inc. will not be liable for the safety and performance of these power supplies/battery packs if unauthorized access and repair occurs. End user should consult applicable UL, CSA or EN standards for proper installation instruction.

Limitation of Use:

GlobTek products are intended for use with commercial, medical, and/or industrial equipment only. GlobTek product are not authorized for use as mission critical components in life support hazardous environment, nuclear or aircraft applications without prior written approval from the CEO of GlobTek Inc.
Contents of this document are subject to change without prior notice.

Customer Approval of Specification:

Please approve, sign and send back to GlobTek so we can complete order processing.
A delay in receipt of this form will delay delivery schedule.

Company Name:	Customer P/N:
Quote Number:	Date:
Authorized Representative Name:	Authorized Representative Signature:

PROPRIETARY INFORMATION
PROPRIETARY OF GLOBTEK, INC. ANY REPRODUCTION, DISCLOSURE OR USE OF THIS DRAWING, IN WHOLE OR IN PART, IS HEREBY PROHIBITED EXCEPT AS SPECIFIED IN WRITING BY GLOBTEK, INC. © GlobTek, Inc. 2017 - 2024
guest / 04/26/2024 7:49:16 PM GMT

REVISION HISTORY

REV	DESCRIPTION	SUB	DATE	APPROVED
A1	Update approval: Removed QPS (NRCan)	rchiu	09/13/2017	QA
A	Initial release	rchiu	08/25/2017	QA

POWER SUPPLY INFORMATION

TYPE	Wall Plug-in
TECHNOLOGY	Regulated Switchmode AC-DC Power Supply AC Adaptor
CASE COLOR	GlobTek Black
NAMEPLATE RATED INPUT	100-240V~, 50-60 Hz, 0.3 A
INPUT CONFIG	Interchangeable Blades
WATTS	6.00
VOLTS OUT	5.0
CURRENT OUT (Amps)	1.2
BLADE/CORD INCLUDED	Q-NA(R) Q-Series N. American
BLADE/CORD INSTALLED	Q-NA(R) :Q-Series N. American
INGRESS PROTECTION	Indoor Use
GROUNDING CONFIGURATION	(F1) Floating output, Class II / double insulated
EFFICIENCY LEVEL	USA DOE Level VI / Eco-design Directive 2009/125/EC, (EU) 2019/1782 - Europe Code of Conduct on Energy Efficiency of External Power Supplies - Version 5
OUTPUT CONFIGURATION	1830 mm, 18/1C + Shield Cond, UL 1185, Female Barrel 5.5 * 2.5 * 11mm with internal Spring Clip and Locking Notch or Equal, Ferrite: None, GlobTek Black, GT Cord # C0444
OVERMOLDED	Yes
OUTPUT CONNECTOR GENDER	Female
CONNECTOR PIN OUT	Center Positive (+V), symbol compliant with IEC 60417 symbol no. 5926
LABEL SPECS	Standard GT,L-1186
SPECIAL BARCODE LABEL MATERIAL	No
PACK SPEC	Standard WPI, Individually Box, User manual
USER MANUAL	809-PSUQKITUSERMANUAL on A4 paper

PROPRIETARY INFORMATION
PROPRIETARY OF GLOBTEK, INC. ANY REPRODUCTION, DISCLOSURE OR USE OF THIS DRAWING, IN WHOLE OR IN PART, IS HEREBY PROHIBITED EXCEPT AS SPECIFIED IN WRITING BY GLOBTEK, INC. © GlobTek, Inc. 2017 - 2024
guest / 04/26/2024 7:49:16 PM GMT

GlobTek, Inc.
www.globtek.com
186 Veterans Drive,
Northvale, NJ 07647
Tel. (201) 784-1000
Fax (201) 784-0111

Drawing Title: GT-46060-0605, ICT/ITE Power Supply, Efficiency Level: USA DOE Level VI / Eco-design Directive 2009/125/EC, (EU) 2019/1782, Case Color/Style: GlobTek Black, Wall Plug-in, Regulated Switchmode AC-DC Power Supply AC Adaptor, Input Rating: 100-240V~, 50-60 Hz, Interchangeable Blades, https://www.globtek.com/interchangeable-blades.php, Output Rating: 6.00W, 5.0V@1.2A, Pin Out: Center Positive (+V), symbol compliant with IEC 60417 symbol no. 5926, Output Configuration: 1830 mm, 18/1C + Shield Cond, UL 1185, Female Barrel 5.5 * 2.5 * 11mm with internal Spring Clip and Locking Notch or Equal, Ferrite: None, GlobTek Black, GT Cord # C0444, Blades/Input Cord: Q-Series N. American, Approvals:	
Model No. GT-46060-0605	
Part No./Ordering No. WR9QA1200LCPNA-N(R6B	Rev A1

Notes/Modifications/Customizations (notes in this section supersede the values shown in the standard spec)

DIMENSIONS ARE IN MM UNLESS SPECIFIED OTHERWISE

PROPRIETARY INFORMATION
PROPRIETARY OF GLOBTEK, INC. ANY REPRODUCTION, DISCLOSURE OR USE OF THIS DRAWING, IN WHOLE OR IN PART, IS HEREBY PROHIBITED EXCEPT AS SPECIFIED IN WRITING BY GLOBTEK, INC. © GlobTek, Inc. 2017 - 2024
guest / 04/26/2024 7:49:16 PM GMT

ELECTRICAL SPECIFICATIONS

A) ELECTRICAL SPECIFICATIONS:
01. Input Voltage: Specified 90-264 Vac, Nameplate rated: 100-240Vac
02. Input Frequency: Specified 47-63 Hz, Nameplate rated 50-60Hz
03. Inrush Current: No damage. On power when switching on/off repeatedly under any condition.
04. Average Efficiency: 75% Min. (CEC & DOE LEVEL VI Compliant), 75.1% Min. (ErP European Commission's EcoDesign Directive (2009/125/EC)) / CoC Tier 2 Compliant)
05. Input power(no load): < 0.1W (CEC & DOE LEVEL VI Compliant), <0.075W (ErP European Commission's EcoDesign Directive (2009/125/EC) / CoC Tier 2 Compliant)
07. Output Voltage toterance: ±5%
08. Line regulation: ± 3%
09. Ripple Voltage: 150mV (p-p): Input :(100V-240VAC), Output:full load
10. Output Ripple (Vp-p): +/-1% or 150 mV whichever is greater, measured at 20 MHz bandwidth with 0.1 uf ceramic capacitor in parallel with 10 uf electrolytic capacitor connected at the end of the output connector at nominal line

B) PROTECTION
01. Over voltage protection: Output shut down and auto restart
02. Short circuit protection: Output shut down and auto restart
03. Insulation resistance: Input to output: 500Vdc to test the input to output resistance not be less 100M Ohm

C) SAFETY
01. HI-POT : Input to output : 3000VAC or 4242VDC 10mA 1 minute
02. Touch Current: <0.25mA @ 240Vac input voltage

D) EMC
01. Emissions, per EN 55032, EN 61000-6-3, EN 61000-6-4
Conducted Emissions: FCC 47CFR15 Subpart B Class B,
ICES-003 Class B
Radiated Emissions:FCC 47CFR15 Subpart B Class B,
ICES-003 Class B
02. Line Frequency Harmonics EN61000-3-2, Class A
03. Voltage Fluctuations/Flicker EN61000-3-3
04. Immunity, per EN 55024, EN 61000-6-1
Static Discharge Immunity EN61000-4-2, 4kV Contact Discharge, 8kV air discharge
Radiated RF Immunity EN61000-4-3, 10V/m 80-1000MHz and 3V/m 1.4-6.0GHz, 80% 1KHz AM.
EFT/Burst Immunity EN61000-4-4, 2KV/5KHz or 2KV/100KHz.
Line Surge Immunity EN61000-4-5, 1kV differential, 2kV common-mode
Conducted RF Immunity EN61000-4-6, 10VRMS, 80% 1KHz AM
Power Frequency Magnetic Field Immunity EN61000-4-8, 30A/m
Voltage Dip Immunity EN61000-4-11, Criteria

E) OTHER:
01. MTBF: 200,000 Hours @ 25°C ambient temperature
02. Operating Temperature: 0°C to 40°C ambient temperature

PROPRIETARY INFORMATION
PROPRIETARY OF GLOBTEK, INC. ANY REPRODUCTION, DISCLOSURE OR USE OF THIS DRAWING, IN WHOLE OR IN PART, IS HEREBY PROHIBITED EXCEPT AS SPECIFIED IN WRITING BY GLOBTEK, INC. © GlobTek, Inc. 2017 - 2024
guest / 04/26/2024 7:49:16 PM GMT

03. Humidity Operating : 20% to 80%. 0% to 90% relative humidity
04. Storage Temperature: -10°C to 70°C
Humidity Storage: 10% to 90%
05. RoHS 2: Complies with EU 2011/65/EU and China SJ/T 11364-2014

F) ENCLOSURE
01. Housing: High impact plastic, 94V0 polycarbonate, non-vented

PROPRIETARY INFORMATION
PROPRIETARY OF GLOBTEK, INC. ANY REPRODUCTION, DISCLOSURE OR USE OF THIS DRAWING, IN WHOLE OR IN PART, IS HEREBY PROHIBITED EXCEPT AS SPECIFIED IN WRITING BY GLOBTEK, INC. © GlobTek, Inc. 2017 - 2024
guest / 04/26/2024 7:49:16 PM GMT

02. Size: 40.5 x 64.0 x 30.0 +/-1.0 mm
03. Weight : 68.5 g
04. Markings: Label and/or Pad Printed and/or Molded in the case

TO ADDRESS SYSTEM-LEVEL EMI CONCERNS, FERRITE CHOKES/BEADS MAY BE ADDED/REVISED UPON REQUEST. A SAMPLE KIT OF GLOBTEK'S STANDARD FERRITES IS AVAILABLE UNDER GLOBTEK P/N: EMI-MITIGATION-KIT1

FOR ADDITIONAL INFORMATION, PLEASE READ OUR WHITE PAPER AT: https://r.globtek.info/3QeaqtD

INGRESS PROTECTION: Indoor Use

PROPRIETARY INFORMATION
PROPRIETARY OF GLOBTEK, INC. ANY REPRODUCTION, DISCLOSURE OR USE OF THIS DRAWING, IN WHOLE OR IN PART, IS HEREBY PROHIBITED EXCEPT AS SPECIFIED IN WRITING BY GLOBTEK, INC. © GlobTek, Inc. 2017 - 2024
guest / 04/26/2024 7:49:16 PM GMT

3D File Download https://www.globtek.com/dl/GT-46060-Q.IGS

Mechanical drawing

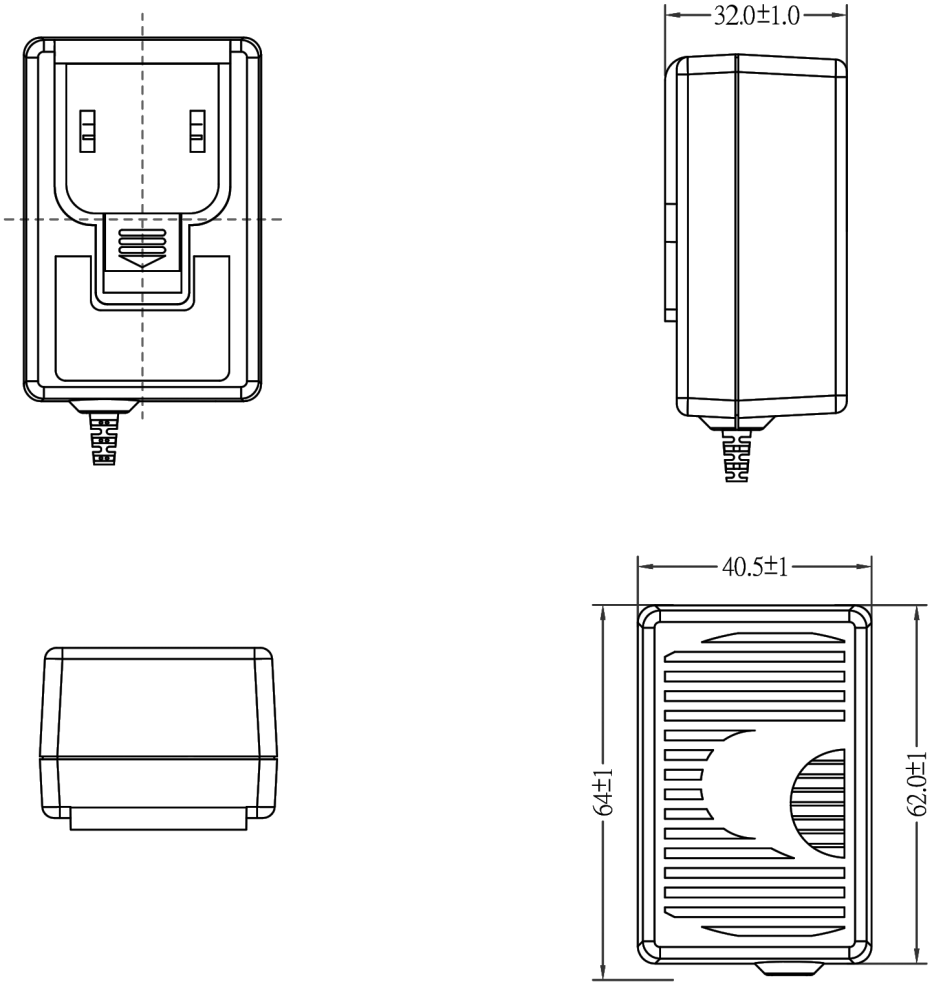

PROPRIETARY INFORMATION

PROPRIETARY OF GLOBTEK, INC. ANY REPRODUCTION, DISCLOSURE OR USE OF THIS DRAWING, IN WHOLE OR IN PART, IS HEREBY PROHIBITED EXCEPT AS SPECIFIED IN WRITING BY GLOBTEK, INC. © GlobTek, Inc. 2017 - 2024

guest / 04/26/2024 7:49:16 PM GMT

DERATING CURVE

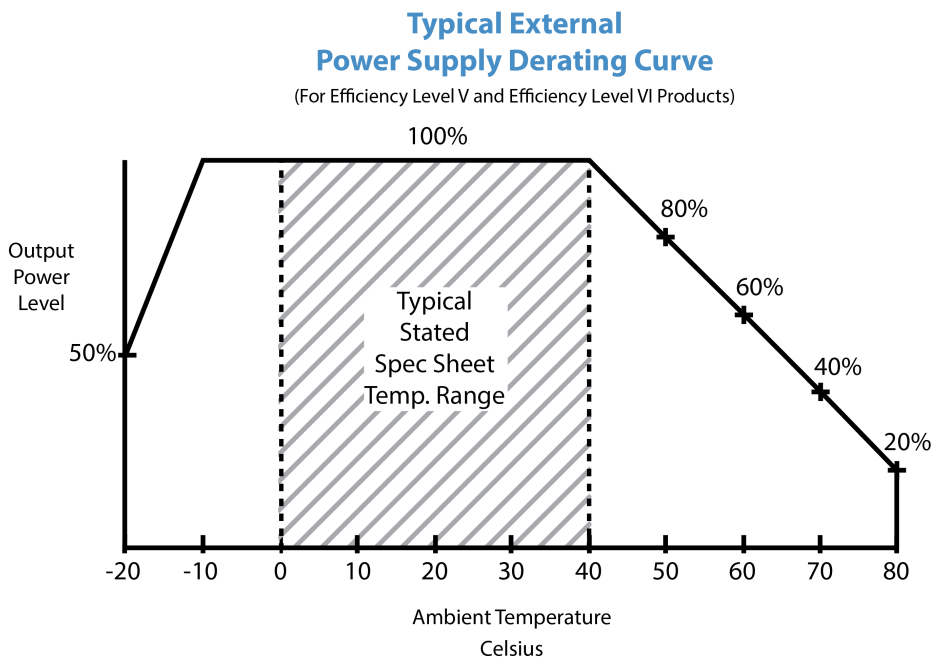

PROPRIETARY INFORMATION

PROPRIETARY OF GLOBTEK, INC. ANY REPRODUCTION, DISCLOSURE OR USE OF THIS DRAWING, IN WHOLE OR IN PART, IS HEREBY PROHIBITED EXCEPT AS SPECIFIED IN WRITING BY GLOBTEK, INC. © GlobTek, Inc. 2017 - 2024

guest / 04/26/2024 7:49:16 PM GMT

INPUT CONFIGURATION

(F1) Floating output, Class II / double insulated

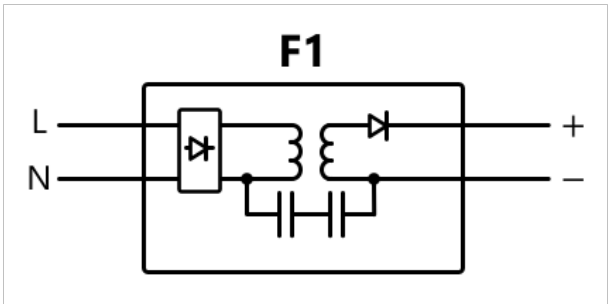

Alternate grounding configurations available upon request.

Blades/Cord Included:Q-NA(R):Q-Series N. American

Blades/Cord Installed:Q-NA(R):Q-Series N. American

Q Blades (Interchangeable)
Blade Options for Q Series Wall Plug-in Power Supplies

PROPRIETARY INFORMATION
PROPRIETARY OF GLOBTEK, INC. ANY REPRODUCTION, DISCLOSURE OR USE OF THIS DRAWING, IN WHOLE OR IN PART, IS HEREBY PROHIBITED EXCEPT AS SPECIFIED IN WRITING BY GLOBTEK, INC. © GlobTek, Inc. 2017 - 2024
guest / 04/26/2024 7:49:16 PM GMT

Data Sheet: http://en.globtek.com/interchangeable-blades.php

Insertion Instructions: http://www.globtek.com/pdf/Instructions-Interchangeable-Blades.pdf

Video: Q-Blade Style Instruction Video

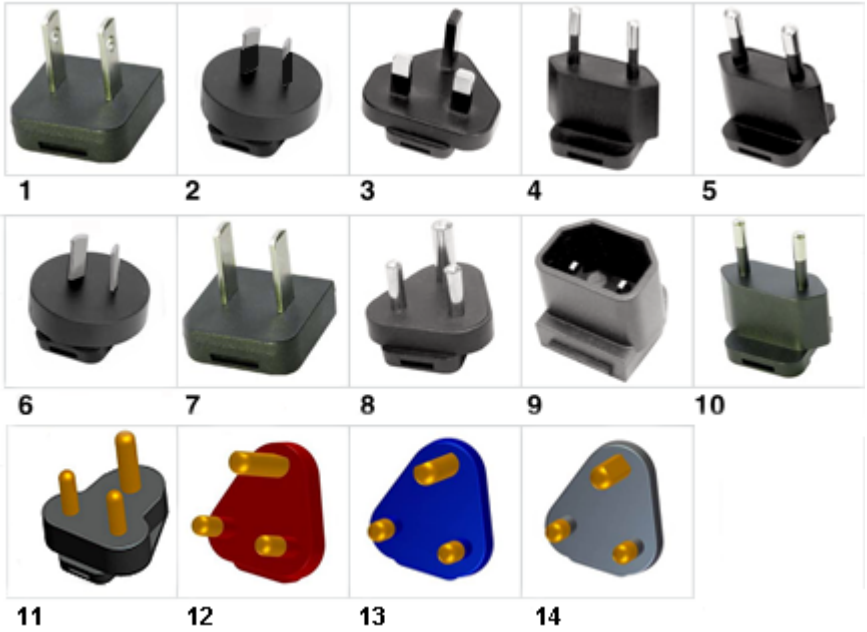

INPUT CONNECTOR: Q-Socket (below are available blades configurations which are "not included" (unless stated above); can be purchased separately, package with power supply or as a separate "Q-KIT" if specified

PROPRIETARY INFORMATION

PROPRIETARY OF GLOBTEK, INC. ANY REPRODUCTION, DISCLOSURE OR USE OF THIS DRAWING, IN WHOLE OR IN PART, IS HEREBY PROHIBITED EXCEPT AS SPECIFIED IN WRITING BY GLOBTEK, INC. © GlobTek, Inc. 2017 - 2024

guest / 04/26/2024 7:49:16 PM GMT

01. United States / Canada / Japan NEMA 1-15P/ IEC PLUG Type A [WORKS IN PLUG B] configuration: NA 2 blades, Class II; US/CA/JP P/N: Q-NA(R)
02. Australian AS 3112 configuration: SAA 2 blade/ IEC TYPE I, Class II; AU P/N: Q-SAA(R)
03. UK BS 1363 configuration: UK 3 blade with dummy Ground/ IEC TYPE G, Class II; GB P/N: Q-UK(R)
04. European CEE 7/16 configuration: Europlug 2 pins/ IEC TYPE C [WORKS IN TYPE E&F], Class II; EU P/N: Q-EU(R)
05. Korean KS C8305 configuration: 2 pins/SIMILAR TO IEC TYPE C, Class II; KR P/N: Q-KR(R)
06. Argentina IRAM 2073 configuration: 2 blades/SIMILAR TO IEC TYPE I; AR P/N: Class II Q-AR(R)
07. China GB 2099 configuration: 2 blades/SIMILAR TO TYPE A, Class II; CN P/N:Q-CN(R)
08. India IS 1293 6A/BS546 configuration: 5A, 3 pins with Dummy Ground, Class II/IEC TYPE D; IN P/N: Q-IN(R)
09. IEC60320/C18 Inlet, Class II; P/N: Q-C18(R)
10. Brazilian NBR6147 configuration: 2 pins, Class II;SIMILAR TO IEC TYPE C BR P/N: Q-BR(R)
11. South Africa SABS164-1 and India IS 1293, IS694, 16A type plug, 3 round prongs, Class II + dummy ground, IEC TYPE M P/N: Q-SANS164-1-16A(R)
12. South Africa SABS164-4, 3 round prongs with a notched prong @ 0º, Class II + dummy ground, IEC TYPE M Red, P/N:
Q-SANS164-4C-16A(R)
13. South Africa SABS164-4, 3 round prongs with a notched prong @ -53º, Class II + dummy ground, Blue, IEC TYPE M, P/N:
Q-SANS164-4L-16A(R)
14. South Africa SABS164-4, 3 round prongs with a notched prong @ +53º, Class II + dummy ground, Black,IEC TYPE M P/N:
Q-SANS164-4R-16A(R)

Kits

01. Q-KIT: 1,2,3,4 above
02. Q-KIT-INTL: 2,3,4 above
03. Q-KIT-6: 1,2,3,4,5,6 above
04. Q-KIT-7: 1,2,3,4,5,6,7 above
05. Q-KIT-8: 1,2,3,4,5,6,7,8 above

PROPRIETARY INFORMATION
PROPRIETARY OF GLOBTEK, INC. ANY REPRODUCTION, DISCLOSURE OR USE OF THIS DRAWING, IN WHOLE OR IN PART, IS HEREBY PROHIBITED EXCEPT AS SPECIFIED IN WRITING BY GLOBTEK, INC. © GlobTek, Inc. 2017 - 2024
guest / 04/26/2024 7:49:16 PM GMT

OUTPUT CORD AND CONNECTOR: LCL/C0444

ACTUAL CONNECTORS, OVERMOLDS, FERRITES MAY VARY SLIGHTLY FROM THE PICTURE BELOW

CABLE TYPE	UL 1185
CABLE LENGTH (mm)	1830
CABLE TOLERANCE (mm)	+150,-0
WIRE GAUGE (AWG)	18
CONDUCTORS	1C + Shield
HANK DIMENSION (mm)	80 +/-15
CABLE / CONNECTOR OVERMOLD COLOR	GlobTek Black
FERRITE TYPE AND DIMENSION	None
FERRITE NUMBER OF TURNS(Definition)	N/A
FERRITE DIMENSION FROM STRAIN RELIEF	N/A
FERRITE DIMENSION FROM PLUG	N/A
PLUG TYPE	Female Barrel 5.5 * 2.5 * 11mm with internal Spring Clip and Locking Notch or Equal
OUTPUT CONNECTOR GENDER	Female
OVERMOLDED	Yes
OVER MOLD ORIENTATION	Straight
CONNECTOR PIN OUT	Center Positive (+V), symbol compliant with IEC 60417 symbol no. 5926

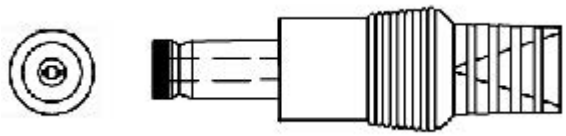

ADDITIONAL OUTPUT PLUG OPTIONS ARE AVAILABLE AT https://www.globtek.com/en/connectors
STANDARD PLUGS AND CONNECTORS CAN BE SEEN ONLINE AT https://www.globtek.com/en/connectors
CALCULATE VOLTAGE REGULATION/DROP WITH OUR ONLINE CALCULATOR: https://www.globtek.com/r2/PtqjjL

PROPRIETARY INFORMATION
PROPRIETARY OF GLOBTEK, INC. ANY REPRODUCTION, DISCLOSURE OR USE OF THIS DRAWING, IN WHOLE OR IN PART, IS HEREBY PROHIBITED EXCEPT AS SPECIFIED IN WRITING BY GLOBTEK, INC. © GlobTek, Inc. 2017 - 2024
guest / 04/26/2024 7:49:16 PM GMT

OUTPUT CONNECTOR HOOK UP

TO ADDRESS SYSTEM-LEVEL EMI CONCERNS, FERRITE CHOKES/BEADS MAY BE ADDED/REVISED UPON REQUEST. A SAMPLE KIT OF GLOBTEK'S STANDARD FERRITES IS AVAILABLE UNDER GLOBTEK P/N: EMI-MITIGATION-KIT1

FOR ADDITIONAL INFORMATION, PLEASE READ OUR WHITE PAPER AT:
https://www.globtek.com/en/technical-articles/ferrite-kit-radiated-emi-suppression-kit-for-globtek-power-supplies-cable-assemblies

PROPRIETARY INFORMATION
PROPRIETARY OF GLOBTEK, INC. ANY REPRODUCTION, DISCLOSURE OR USE OF THIS DRAWING, IN WHOLE OR IN PART, IS HEREBY PROHIBITED EXCEPT AS SPECIFIED IN WRITING BY GLOBTEK, INC. © GlobTek, Inc. 2017 - 2024
guest / 04/26/2024 7:49:16 PM GMT

LABEL:L-1186

LABEL P/N	Standard GT
MATERIAL	Flat Thermal Transfer, Imprintable, Polyester Label and/or Pad Printed and/or Molded, and/or Laser Engraved in the case
BACKGROUND COLOR	Black if housing is Black, White or Silver if housing is White or Gray.
TEXT COLOR	White or Silver if label is Black Background for Black housing. Black if label is White or Silver background and Housing is White or Gray.
LABEL WIDTH (mm)	33.6
LABEL HEIGHT (mm)	25.1
SPECIAL BARCODE LABEL MATERIAL	No

Below is the minimum information which will appear on the label. NOTE: in the logo area additional/actual positioning of symbols and text is subjected to change as per agency updates/requirements or additional model approvals become available.
Regulatory certifications/label markings may be in logo area on the label or molded into the case housing outside the label area.
Information will be shown via label and/or pad printed and/or molded and/or laser engraved in the case. * Date code markings at GlobTek option
.

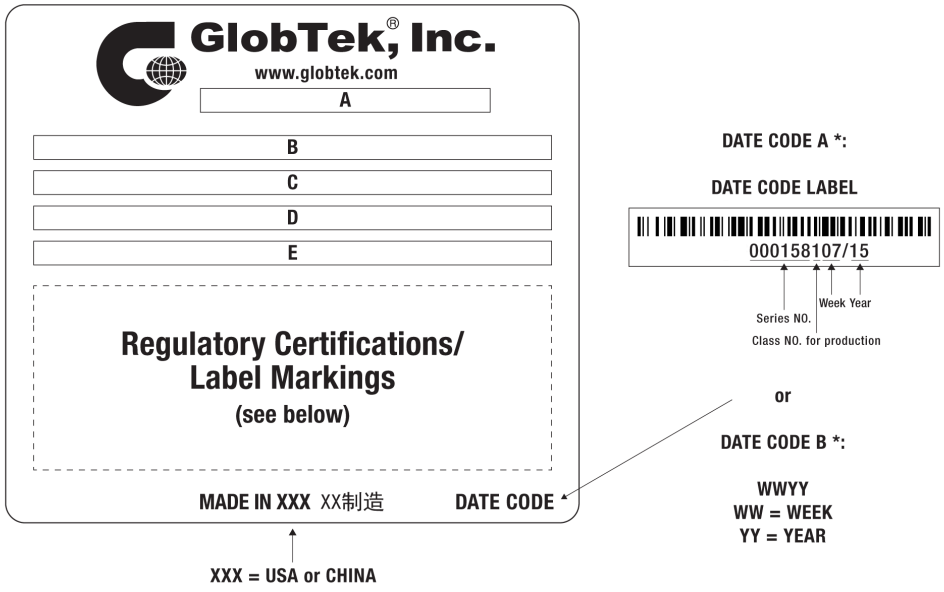

A=ICT/ITE Power Supply
B=P/N: (料号) WR9QA1200LCPNA-N(R6B
C=Model (型号) GT-46060-0605
D=Input (输入)100-240V~, 50-60 Hz, 0.3 A
E=Output (输出)5.0 V ⎓ 1.2 A, 6.00W

PROPRIETARY INFORMATION
PROPRIETARY OF GLOBTEK, INC. ANY REPRODUCTION, DISCLOSURE OR USE OF THIS DRAWING, IN WHOLE OR IN PART, IS HEREBY PROHIBITED EXCEPT AS SPECIFIED IN WRITING BY GLOBTEK, INC. © GlobTek, Inc. 2017 - 2024
guest / 04/26/2024 7:49:16 PM GMT

AGENCY ONLINE DOCUMENTS	http://www.globtek.info/certs/GT-46060-06VV-X.X/
CE EC-Declaration for Medical	Contact GlobTek for more information
CE EC-Declaration for Industrial/Commercial/ITE	https://cs.globtek.info/ec_declaration_product?id=01ta0000007deS7&i=2
CE EC-Declaration for Household	Contact GlobTek for more information
UKCA-Declaration for Medical	Contact GlobTek for more information
UKCA-Declaration for Industrial/Commercial/ITE	https://cs.globtek.info/ukca_declaration_product?id=01ta0000007deS7&i=2
UKCA-Declaration for Household	Contact GlobTek for more information
Morocco SDoC Declaration	https://cs.globtek.info/Morocco_SDoC_Declaration?id=a0Oa000000MF1MaEAL
RoHS/RoHS3 Declaration	https://www.globtek.com/pdf/rohs_cert/01ta0000007deS7AAI
REACH Declaration	https://www.globtek.com/pdf/iso_certificates/REACH.pdf
Conflict Minerals Declaration	https://www.globtek.com/pdf/conflict-minerals.pdf
Prop 65 Statement	https://www.globtek.com/prop-65-statement.pdf

IPXY rating is based on 3rd party testing and customers should check suitability and test system level IPXY rating before ordering.

Regulatory Certifications/Label Markings

Below follows a link to the latest regulatory certifications and marks for this specific product. National standards as well as certification schemes are constantly changing and so is the set of certification marks and symbols applicable to this product. Various standards, marks and symbols, and certificates are subject to change at any time without notice.

Additional standards or unique country certifications are available upon request. Please contact Globtek to request a quotation.

LATEST PRODUCT/MODEL CERTIFICATIONS:	https://www.globtek.com/ds/inJDZVk69vp/4Y2L3zrDYwh.html
AGENCY ONLINE DOCUMENTS	http://www.globtek.info/certs/GT-46060-06VV-X.X/

(F1) Floating output, Class II / double insulated

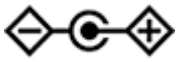

Center Positive (+V), symbol compliant with IEC 60417 symbol no. 5926

PROPRIETARY INFORMATION
PROPRIETARY OF GLOBTEK, INC. ANY REPRODUCTION, DISCLOSURE OR USE OF THIS DRAWING, IN WHOLE OR IN PART, IS HEREBY PROHIBITED EXCEPT AS SPECIFIED IN WRITING BY GLOBTEK, INC. © GlobTek, Inc. 2017 - 2024
guest / 04/26/2024 7:49:16 PM GMT

PACKAGING

Packing Spec P/N	Standard WPI, Individually Box, User manual
Box Qty	120
Gift Box Size (mm)	43*90*60
Gift Box Color	White
Master Carton Size (mm)	471 x 279 x 267
Master Carton Cubic Volume (m³)	0.04
Master GW (Kg)	8.4 kg
BLADES INCLUDED	Q-NA(R): Q-Series N. American
BLADE/CORD INSTALLED	Q-NA(R): Q-Series N. American
USER MANUAL*	809-PSUQKITUSERMANUAL on A4 paper
USER MANUAL WEB LINK	https://www.globtek.com/pdf/809-PSUQKITUSERMANUAL.jpg

* This specification sheet is considered the user manual for all applications. It is expected that the buyer of this product will use it to formulate their own user manual for their end product and a user manual specifically for the power adapter is not usually required. If a user manual is not specifically listed above then none will be provided with this unit.

If specific packaging is required, this section must specify all requirements and note “no exceptions”. If this section does not specify packaging, it is subject to change without notice at GlobTek’s discretion

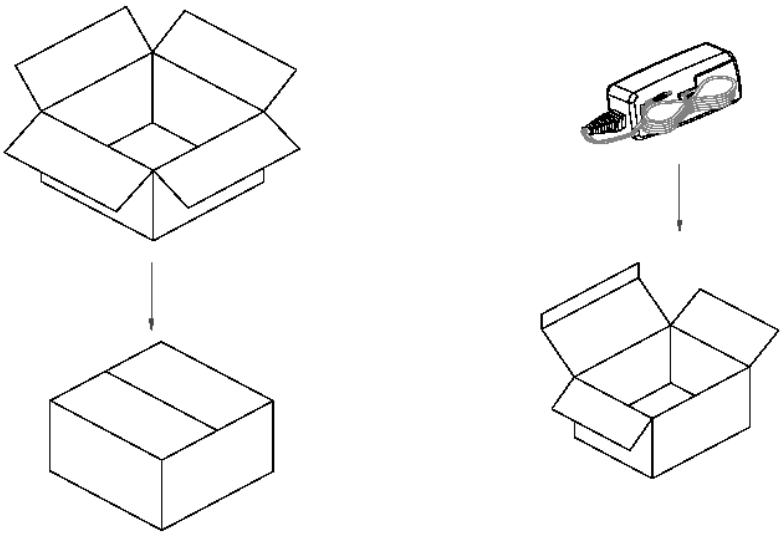

PROPRIETARY INFORMATION
PROPRIETARY OF GLOBTEK, INC. ANY REPRODUCTION, DISCLOSURE OR USE OF THIS DRAWING, IN WHOLE OR IN PART, IS HEREBY PROHIBITED EXCEPT AS SPECIFIED IN WRITING BY GLOBTEK, INC. © GlobTek, Inc. 2017 - 2024
guest / 04/26/2024 7:49:16 PM GMT

INSTRUCTIONS TO THE OEM SYSTEMS ENGINEER

It is the responsibility of the OEM systems engineer to provide the end system user instructions and warnings for the use of this product in the end system.

If an input cord is required for this product, AC Mains voltage should be provided to the power supply by a power supply cord approved to the national standards of the country in which it will be used.

This product is not designed to be repaired. No serviceable parts inside. A blown internal fuse is an indication of catastrophic failure of circuit component(s). If a Failure Analysis is required for a failed power supply/battery charger, please return the damaged unit to GlobTek for an accurate determination of the root cause of the failure.

EMC Compliance of the complete OEM product, including the GlobTek power supply/battery charger needs to be verified by the OEM systems engineer.

PROPRIETARY INFORMATION

PROPRIETARY OF GLOBTEK, INC. ANY REPRODUCTION, DISCLOSURE OR USE OF THIS DRAWING, IN WHOLE OR IN PART, IS HEREBY PROHIBITED EXCEPT AS SPECIFIED IN WRITING BY GLOBTEK, INC. © GlobTek, Inc. 2017 - 2024

guest / 04/26/2024 7:49:16 PM GMT

INSTRUCTION SHEET

Q Blades Instruction Sheet (not required to be packaged with product)

Insertion Instructions: http://www.globtek.com/pdf/Instructions-Interchangeable-Blades.pdf

This manual is Provided to customer within the product specification - it is the responsibility of the OEM/customer to provide the end system user instructions + warnings for the use of this product in the end system. By accepting this specification the customer/OEM Agrees to these terms.

USER MANUAL FOR Q-BLADE SERIES SWITCHING POWER SUPPLIES

Manual del Usuario. Fuentes de Alimentación Series Q-Blade

WARNING! RISK OF FIRE! SHOCK HAZARD!: To prevent electric shock, do not remove the cover. No user-serviceable parts inside. This unit contains hazardous voltages and should only be opened by a trained and qualified technician. Do not use if bent, cracked, modifed or compromised. To avoid the possibility of electric shock, disconnect electric power to the product before connecting or disconnecting.

Advertencia! Riesgo de Fuego! Peligro de Choque eléctrico! No contiene dentro componentes servibles para el usuario. Desconecte el cable de alimentación antes de quitar la cubierta.

INDOOR USE ONLY!

Únicamente para uso en el interior.

POWER SUPPLY BLADE/CORD: AC Mains voltage should be provided to the power supply by a power supply cords approved to the national standards in which it will be used. Please use the below table as a guideline for Suitable Power cords.

CABLE DE ALIMENTACIÓN: El voltaje de la CA debe proporcionarse a la fuente de alimentación mediante los cables de alimentación aprobados conforme a las normas nacionales según las cuales será utilizada. Utilice por favor la tabla mencionada aquí abajo como guía para los cables eléctricos adecuados.

PROPRIETARY INFORMATION

PROPRIETARY OF GLOBTEK, INC. ANY REPRODUCTION, DISCLOSURE OR USE OF THIS DRAWING, IN WHOLE OR IN PART, IS HEREBY PROHIBITED EXCEPT AS SPECIFIED IN WRITING BY GLOBTEK, INC. © GlobTek, Inc. 2017 - 2024

guest / 04/26/2024 7:49:16 PM GMT

1. Class II model NEMA 1-15P AC power plug with 2 prongs, Q-NA(R)
2. Australian AS 3112 configuration: SAA 2 pins Class II, Q-SAA(R)
3. UK BS 1363 configuration: UK 2 pins Class II, Q-UK(R)
4. European CEE 7/16 configuration: Europlug 2 PINS, Class II, Q-EU(R)
5. Korean KS C8305 configuration: Q-KR(R)
6. Argentina IRAM 2073 configuration: 2 pins, Class II Q-AR(R)
7. China GR 2099 configuration: 2 pins, Class II Q-CN(R)
8. India configuration: 2 pins, Class II, Q-IN(R)
9. IEC320/C18 Inlet

FUSING: Internal fuse for Line is provided in the power supply. A blown internal fuse is an indication of catastrophic failure of circuit component(s). Repair must be performed by GlobTek, Inc. authorized personnel. Fuses must be replaced with same type and ratings per GlobTek internal documentation.

PROPRIETARY INFORMATION
PROPRIETARY OF GLOBTEK, INC. ANY REPRODUCTION, DISCLOSURE OR USE OF THIS DRAWING, IN WHOLE OR IN PART, IS HEREBY PROHIBITED EXCEPT AS SPECIFIED IN WRITING BY GLOBTEK, INC. © GlobTek, Inc. 2017 - 2024
guest / 04/26/2024 7:49:16 PM GMT

FUSIBLES: La fuente de alimentación provee un fusible interno para la línea. Un fusible interno quemado es un indicador de una falla catastrófica de los componentes del circuito. La reparación debe ser hecha por personal autorizado de GlobTek, Inc. Los fusibles se deben reemplazar por los mismos tipos y rangos que la documentación interna de GlobTek mencione.

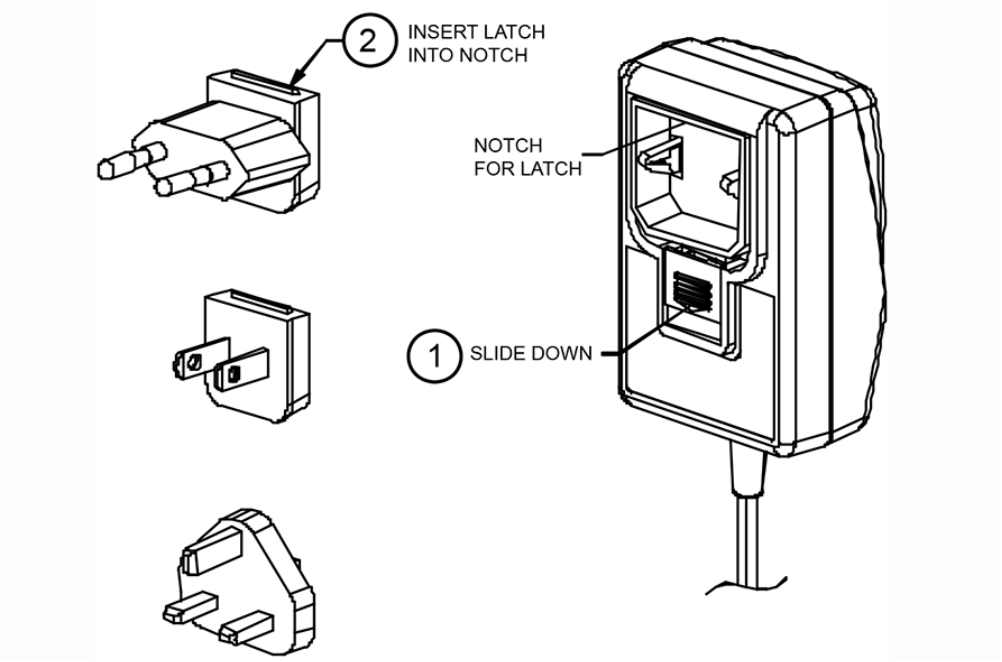

⚠ This symbol on an instrument indicates that the user should refer to the operating instructions located in the manual.

Please note:

The blades shown above are for representation of the installation process and do not indicate which AC blades are included with this power supply. Please reference the specifications “Power Supply Information” (page 2) and “Input Configuration (page 6) for information regarding the actual blade included with this power supply, if any.

PROPRIETARY INFORMATION

PROPRIETARY OF GLOBTEK, INC. ANY REPRODUCTION, DISCLOSURE OR USE OF THIS DRAWING, IN WHOLE OR IN PART, IS HEREBY PROHIBITED EXCEPT AS SPECIFIED IN WRITING BY GLOBTEK, INC. © GlobTek, Inc. 2017 - 2024

guest / 04/26/2024 7:49:16 PM GMT

GlobTek, Inc.
www.globtek.com
186 Veterans Drive,
Northvale, NJ 07647
Tel. (201) 784-1000
Fax (201) 784-0111

Drawing Title: GT-46060-0605, ICT/ITE Power Supply, Efficiency Level: USA DOE Level VI / Eco-design Directive 2009/125/EC, (EU) 2019/1782, Case Color/Style: GlobTek Black, Wall Plug-in, Regulated Switchmode AC-DC Power Supply AC Adaptor, Input Rating: 100-240V~, 50-60 Hz, Interchangeable Blades, https://www.globtek.com/interchangeable-blades.php, Output Rating: 6.00W, 5.0V@1.2A, Pin Out: Center Positive (+V), symbol compliant with IEC 60417 symbol no. 5926, Output Configuration: 1830 mm, 18/1C + Shield Cond, UL 1185, Female Barrel 5.5 * 2.5 * 11mm with internal Spring Clip and Locking Notch or Equal, Ferrite: None, GlobTek Black, GT Cord # C0444, Blades/Input Cord: Q-Series N. American, Approvals:	
Model No. GT-46060-0605	
Part No./Ordering No. WR9QA1200LCPNA-N(R6B	Rev A1

PROPRIETARY INFORMATION
PROPRIETARY OF GLOBTEK, INC. ANY REPRODUCTION, DISCLOSURE OR USE OF THIS DRAWING, IN WHOLE OR IN PART, IS HEREBY PROHIBITED EXCEPT AS SPECIFIED IN WRITING BY GLOBTEK, INC. © GlobTek, Inc. 2017 - 2024
guest / 04/26/2024 7:49:16 PM GMT