| ITEM NO. | PART NUMBER | DESCRIPTION | QTY. | COMPONENT NOTES |
|---|---|---|---|---|
| 1 | 50-00025 | Connector, dc jack, 5.5x2.1xL17.4 mm, molding style | 1 | |
| 2 | 30-00395 | Wire, 2C TS, 18 AWG, UL2468, 300V, 80C, 4.4 mm, VW-1, PVC, 87A | 1 | |
| 3 | 24-00004 | Overmold, PVC | 1 | black |
| 4 | 50-00555 | Connector, 50 mm, alligator clip, red sleeve | 1 | |
| 5 | 50-00556 | Connector, 50 mm, alligator clip, black sleeve | 1 | |

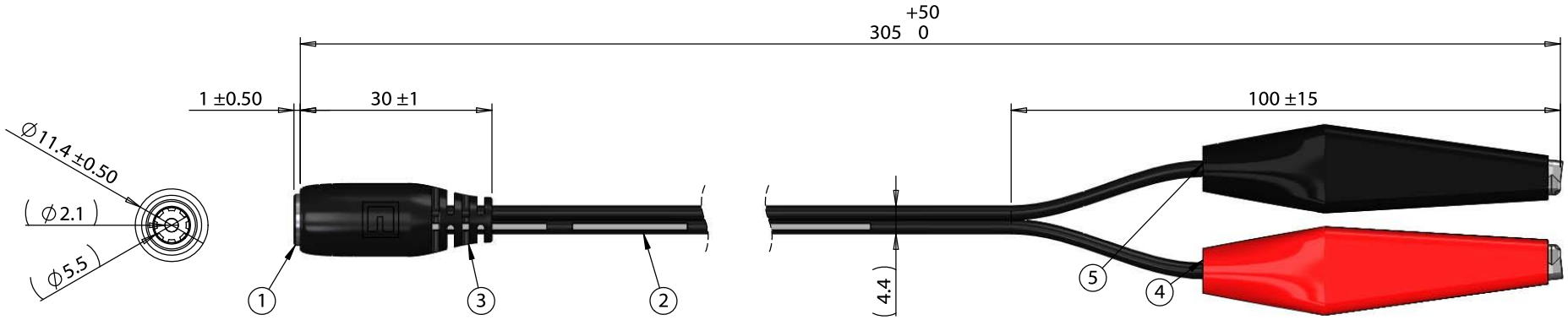


| Wiring Diagram | | |
|---|---|---|
| 50-00025 | wire color | alligator clip |
| center | black with stripe | 50-00555/red |
| sleeve | black | 50-00556/black |

| Revision: | Date: | Description: |
|---|---|---|
| A | 5/23/2017 | Initial release |
| | | |
| | | |
| | | |
| | | |

Prepared: PS Digitally signed by PS Date: 2017.07.20 15:57:49 -07'00'

Verified: GL Digitally signed by GL Date: 2017.07.21 08:32:07 -07'00'

Dimensions are in millimeters.
Tolerances:
X: ± 0.5 mm
X.X: ± 0.3 mm
X.XX: ± 0.05 mm

Notes:

RoHS compliant

Function test: no open, no short circuit, no intermittent

Description:

Cable, 305 mm, 5.5x2.1 mm 50-00025 dc jack to alligator clips, 18 AWG, 30-00395 wire


TENSILITY

*tel* 1.541.323.3228 *800* 877.670.7118
*fax* 1.541.323.4202 *web* tensility.com


Size: A

Part number: 10-02460

Scale: 1:1

Sheet 1 of 1

5 4 3 2 1