Glass Passivated Single-Phase Bridge Rectifier

GBPC-W

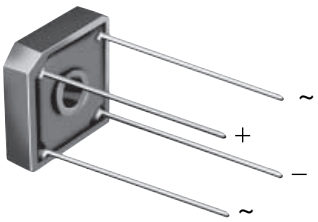

GBPC

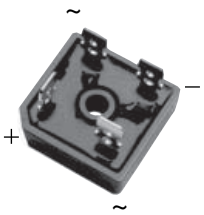

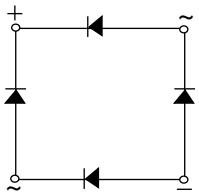

LINKS TO ADDITIONAL RESOURCES

3D Models

PRIMARY CHARACTERISTICS	
$I_{F(AV)}$	12 A, 15 A, 25 A, 35 A
V_{RRM}	50 V to 1000 V
I_{FSM}	200 A, 300 A, 300 A, 400 A
I_R	5 μA
V_F at I_F	1.1 V
T_J max.	150 °C
Package	GBPC, GBPC-W
Circuit configuration	Quad

FEATURES

- UL recognition file number E54214
- Universal 3-way terminals: snap-on, wire wrap-around, or PCB mounting
- Typical I_R less than 0.3 μA
- High surge current capability
- Low thermal resistance
- Solder dip 275 °C max. 10 s, per JESD 22-B106
- Material categorization: for definitions of compliance please see www.vishay.com/doc?99912

RoHS COMPLIANT

TYPICAL APPLICATIONS

General purpose use in AC/DC bridge full wave rectification for power supply, home appliances, office equipment, industrial automation applications.

MECHANICAL DATA

Case: GBPC, GBPC-W
Molding compound meets UL 94 V-0 flammability rating Base P/N-E4 - RoHS-compliant, commercial grade

Terminals: Nickel plated on faston lugs or silver plated on wire leads, solderable per J-STD-002 and JESD 22-B102. Suffix letter "W" added to indicate wire leads (e.g. GBPC12005W).

Polarity: As marked, positive lead by beveled corner

Mounting Torque: 20 inches-lbs. max.

MAXIMUM RATINGS (T_A = 25 °C unless otherwise noted)

PARAMETER		SYMBOL	GBPC12, 15, 25, 35							UNIT
			005	01	02	04	06	08	10	
Maximum repetitive peak reverse voltage		V_{RRM}	50	100	200	400	600	800	1000	V
Maximum RMS voltage		V_{RMS}	35	70	140	280	420	560	700	V
Maximum DC blocking voltage		V_{DC}	50	100	200	400	600	800	1000	V
Maximum average forward rectified output current (Fig. 1)	GBPC12	$I_{F(AV)}$	12							A
	GBPC15		15							
	GBPC25		25							
	GBPC35		35							
Peak forward surge current single sine-wave superimposed on rated load	GBPC12	I_{FSM}	200							A
	GBPC15		300							
	GBPC25		300							
	GBPC35		400							
Rating (non-repetitive, for t greater than 1 ms and less than 8.3 ms) for fusing	GBPC12	I^2t	160							A^2s
	GBPC15		375							
	GBPC25		375							
	GBPC35		660							
RMS isolation voltage from case to leads		V_{ISO}	2500							V
Operating junction storage temperature range		T_J, T_{STG}	-55 to +150							°C

For technical questions within your region: DiodesAmericas@vishay.com, DiodesAsia@vishay.com, DiodesEurope@vishay.com
THIS DOCUMENT IS SUBJECT TO CHANGE WITHOUT NOTICE. THE PRODUCTS DESCRIBED HEREIN AND THIS DOCUMENT ARE SUBJECT TO SPECIFIC DISCLAIMERS, SET FORTH AT www.vishay.com/doc?91000

ELECTRICAL CHARACTERISTICS (T_A = 25 °C unless otherwise noted)												
PARAMETER		**TEST CONDITIONS**	**SYMBOL**	**GBPC12, 15, 25, 35**							**UNIT**
				005	**01**	**02**	**04**	**06**	**08**	**10**	
Maximum instantaneous forward drop per diode	GBPC12	I_F = 6.0 A	V_F	1.1							V
	GBPC15	I_F = 7.5 A									
	GBPC25	I_F = 12.5 A									
	GBPC35	I_F = 17.5 A									
Maximum reverse DC current at rated DC blocking voltage per diode		T_A = 25 °C	I_R	5.0							μA
		T_A = 125 °C		500							
Typical junction capacitance per diode		4 V, 1 MHz	C_J	160							pF

THERMAL CHARACTERISTICS (T_A = 25 °C unless otherwise noted)											
PARAMETER		**SYMBOL**	**GBPC12, 15, 25, 35**							**UNIT**
			005	**01**	**02**	**04**	**06**	**08**	**10**	
Typical thermal resistance	GBPC12 to GBPC25	$R_{\theta JC}$ (1)	1.9							°C/W
	GBPC35		1.4							

Notes

(1) With heatsink

(2) Bolt down on heatsink with silicone thermal compound between bridge and mounting surface for maximum heat transfer with #10 screw

ORDERING INFORMATION (Example)				
PREFERRED P/N	**UNIT WEIGHT (g)**	**PREFERRED PACKAGE CODE**	**BASE QUANTITY**	**DELIVERY MODE**
GBPC1206-E4/51	15.79	51	100	Paper box
GBPC1506-E4/51	15.79	51	100	Paper box
GBPC2506-E4/51	15.79	51	100	Paper box
GBPC3506-E4/51	15.79	51	100	Paper box
GBPC1206W-E4/51	13.8	51	100	Paper box
GBPC1506W-E4/51	13.8	51	100	Paper box
GBPC2506W-E4/51	13.8	51	100	Paper box
GBPC3506W-E4/51	13.8	51	100	Paper box

For technical questions within your region: DiodesAmericas@vishay.com, DiodesAsia@vishay.com, DiodesEurope@vishay.com
THIS DOCUMENT IS SUBJECT TO CHANGE WITHOUT NOTICE. THE PRODUCTS DESCRIBED HEREIN AND THIS DOCUMENT ARE SUBJECT TO SPECIFIC DISCLAIMERS, SET FORTH AT www.vishay.com/doc?91000

RATINGS AND CHARACTERISTICS CURVES (T_A = 25 °C unless otherwise noted)

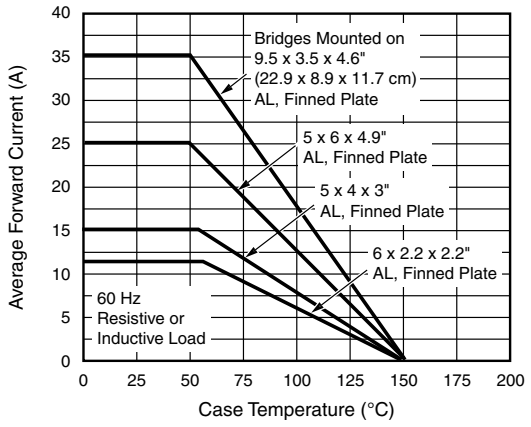

Fig. 1 - Maximum Output Rectified Current

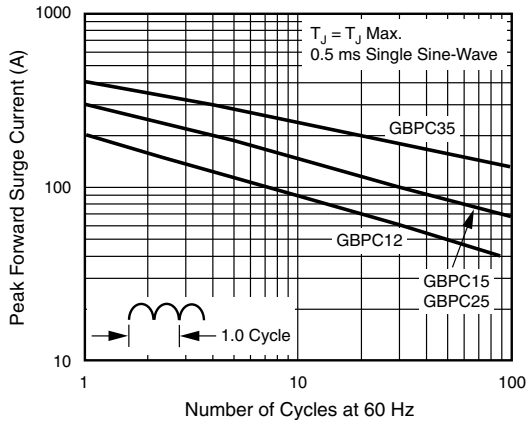

Fig. 4 - Maximum Non-Repetitive Peak Forward Surge Current Per Diode

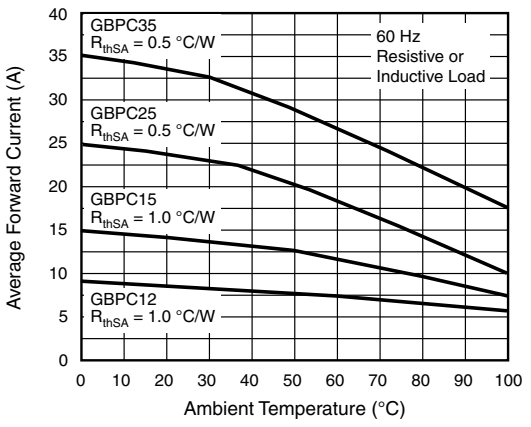

Fig. 2 - Maximum Output Rectified Current

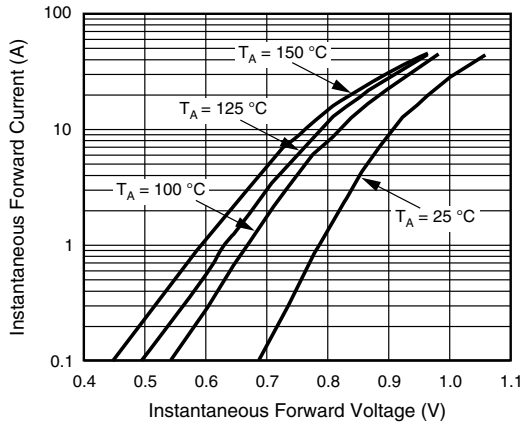

Fig. 5 - Typical Instantaneous Forward Characteristics Per Diode

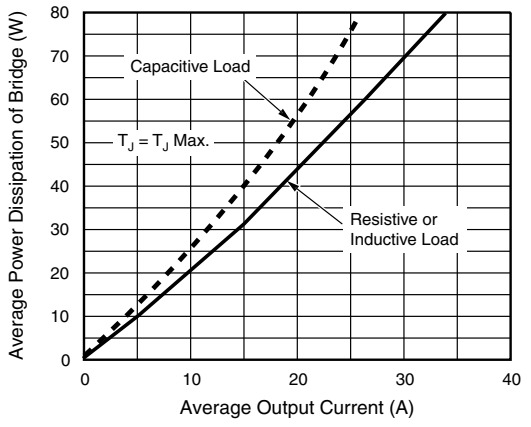

Fig. 3 - Maximum Power Dissipation

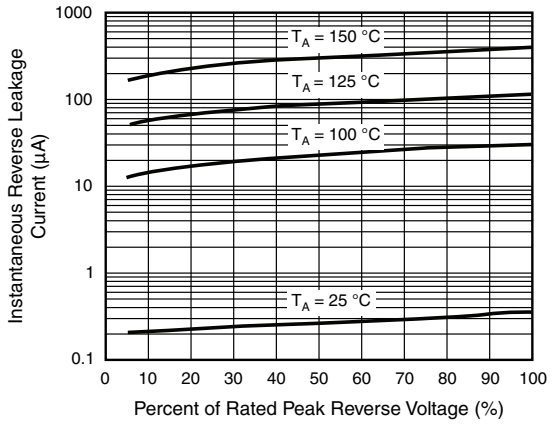

Fig. 6 - Typical Reverse Leakage Characteristics Per Diode

For technical questions within your region: DiodesAmericas@vishay.com, DiodesAsia@vishay.com, DiodesEurope@vishay.com
THIS DOCUMENT IS SUBJECT TO CHANGE WITHOUT NOTICE. THE PRODUCTS DESCRIBED HEREIN AND THIS DOCUMENT ARE SUBJECT TO SPECIFIC DISCLAIMERS, SET FORTH AT www.vishay.com/doc?91000

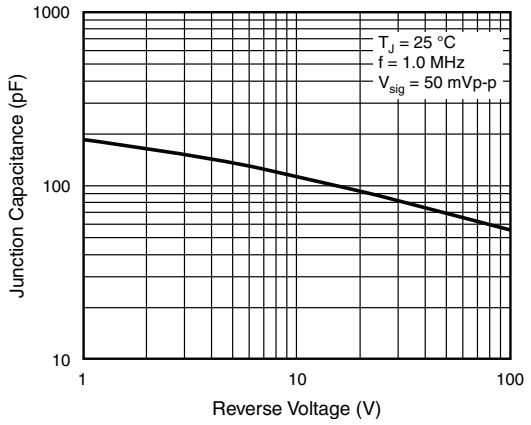

Fig. 7 - Typical Junction Capacitance Per Diode

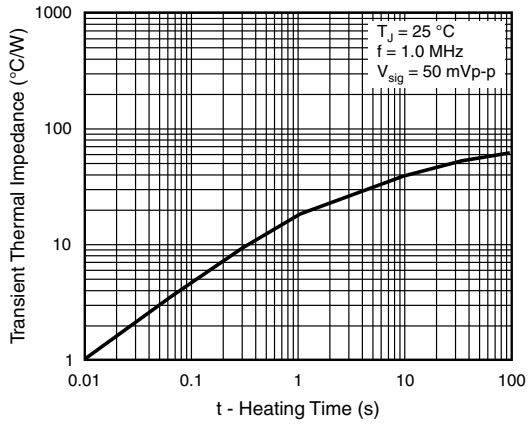

Fig. 8 - Typical Transient Thermal Impedance Per Diode

PACKAGE OUTLINE DIMENSIONS in inches (millimeters)

GBPC-W

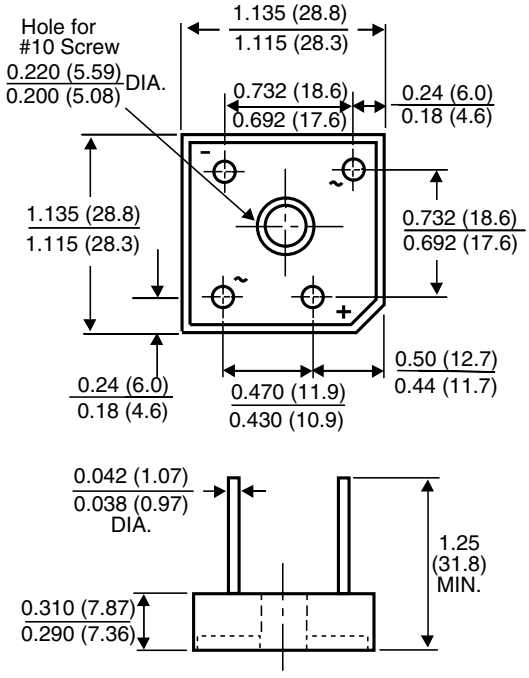

GBPC

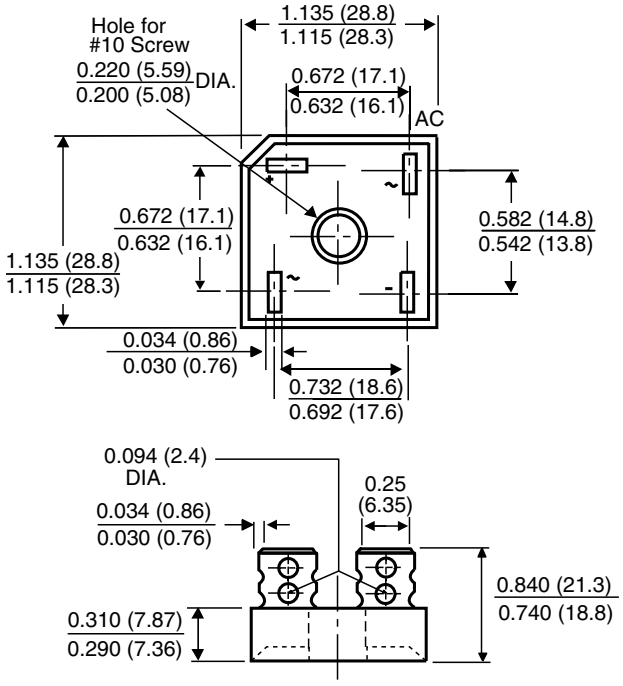

For technical questions within your region: DiodesAmericas@vishay.com, DiodesAsia@vishay.com, DiodesEurope@vishay.com
THIS DOCUMENT IS SUBJECT TO CHANGE WITHOUT NOTICE. THE PRODUCTS DESCRIBED HEREIN AND THIS DOCUMENT ARE SUBJECT TO SPECIFIC DISCLAIMERS, SET FORTH AT www.vishay.com/doc?91000

Disclaimer

ALL PRODUCT, PRODUCT SPECIFICATIONS AND DATA ARE SUBJECT TO CHANGE WITHOUT NOTICE TO IMPROVE RELIABILITY, FUNCTION OR DESIGN OR OTHERWISE.

Vishay Intertechnology, Inc., its affiliates, agents, and employees, and all persons acting on its or their behalf (collectively, “Vishay”), disclaim any and all liability for any errors, inaccuracies or incompleteness contained in any datasheet or in any other disclosure relating to any product.

Vishay makes no warranty, representation or guarantee regarding the suitability of the products for any particular purpose or the continuing production of any product. To the maximum extent permitted by applicable law, Vishay disclaims (i) any and all liability arising out of the application or use of any product, (ii) any and all liability, including without limitation special, consequential or incidental damages, and (iii) any and all implied warranties, including warranties of fitness for particular purpose, non-infringement and merchantability.

Statements regarding the suitability of products for certain types of applications are based on Vishay's knowledge of typical requirements that are often placed on Vishay products in generic applications. Such statements are not binding statements about the suitability of products for a particular application. It is the customer's responsibility to validate that a particular product with the properties described in the product specification is suitable for use in a particular application. Parameters provided in datasheets and / or specifications may vary in different applications and performance may vary over time. All operating parameters, including typical parameters, must be validated for each customer application by the customer's technical experts. Product specifications do not expand or otherwise modify Vishay's terms and conditions of purchase, including but not limited to the warranty expressed therein.

Hyperlinks included in this datasheet may direct users to third-party websites. These links are provided as a convenience and for informational purposes only. Inclusion of these hyperlinks does not constitute an endorsement or an approval by Vishay of any of the products, services or opinions of the corporation, organization or individual associated with the third-party website. Vishay disclaims any and all liability and bears no responsibility for the accuracy, legality or content of the third-party website or for that of subsequent links.

Except as expressly indicated in writing, Vishay products are not designed for use in medical, life-saving, or life-sustaining applications or for any other application in which the failure of the Vishay product could result in personal injury or death. Customers using or selling Vishay products not expressly indicated for use in such applications do so at their own risk. Please contact authorized Vishay personnel to obtain written terms and conditions regarding products designed for such applications.

No license, express or implied, by estoppel or otherwise, to any intellectual property rights is granted by this document or by any conduct of Vishay. Product names and markings noted herein may be trademarks of their respective owners.

© 2024 VISHAY INTERTECHNOLOGY, INC. ALL RIGHTS RESERVED